DESIGN A PLANT TO MANUFACTURE 200,000TPA OF ETHYLENE GLYCOL

A
HOME PAPER SUBMITTED TO
THE INSTITUTE OF CHEMICAL TECHNOLOGY
IN PARTIAL FULFILLMENT OF THE
REQUIREMENTS FOR THE DEGREE OF
BACHELOR OF CHEMICAL ENGINEERING

BY

SWAPNIL DATTATRAY DESHMUKH

(11CHE1017)

FINAL YEAR B. CHEM. ENGG

INSTITUTE OF CHEMICAL TECHNOLOGY

MATUNGA, MUMBAI-400019

2014-2015

GDY

INDEX

SR. NO.	CONTENT	PAGE NO.
1	INTRODUCTION	01
2	EXECUTIVE SUMMARY	06
3	LITERATURE SURVEY	08
4	PROCESS SELECTION	14
5	SITE SELECTION	16
6	THERMODYNAMICS OF REACTION	23
7	KINETICS OF REACTION	30
8	BLOCK DIAGRAM	33
9	PROCESS DESCRIPTION	34
10	MATERIAL BALANCE	36
11	ENERGY BALANCE	49
12	PROCESS DESIGN OF R102	52
13	PROCESS DESIGN OF D101	59
14	SIZING OF EQUIPMENT	75
15	MECHANICAL DESIGN	91
16	MATERIAL OF CONSTRUCTION	99
17	STORAGE & UTILITIES	100
18	INSTRUMENTATION & PROCESS CONTROL	101
19	HAZOP	104
20	SAFETY, HEALTH & ENVIRONMENT	109
21	PROJECT & PLANT LAYOUT	112
22	PROJECT COST	119
23	COST OF PRODUCTION	129
24	WORKING CAPITAL	133
25	FINANCIAL ANALYSIS	135
26	CONCLUSION	146
27	REFERENCES	147

APPENDIX INDEX

APPENDIX	CONTENT	PAGE NO.
A	MATERIAL SAFETY DATA SHEET	150
B	PYTHON CODE	167
C	PROCESS DESIGN DATA SHEET	171

1. INTRODUCTION

This document is a preliminary techno-economic feasibility report for the manufacture of 200,000 Metric Tons per annum of Ethylene Glycol.

Ethylene glycol (EG) is an important organic compound and chemical intermediate used in a large number of industrial processes (e.g. energy, plastics, automobiles, and chemicals). It is a colourless, practically odourless, low-volatility, low-viscosity, hygroscopic liquid. It is completely miscible with water and many organic liquids. The hydroxyl groups on glycols undergo the usual alcohol chemistry, giving a wide variety of possible derivatives.

1.1 Structure and Name

Table 1.1: Structure and Name of Ethylene Glycol

Structure	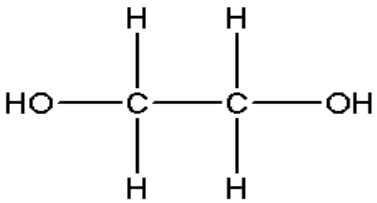
IUPAC Name	1,2-Ethanediol
CAS Registry number	107-21-1
Synonyms	1,2-dihydroxyethane

	Mono-ethylene Glycol Ethylene Glycol Glycol Glycol alcohol

1.2 Properties

Table 1.2: Physical Properties of Ethylene Glycol

Properties	**Values**
Molecular Weight	62.07 g/mol
Boiling Point	197.1^{o}C
Freezing Point	-13°C
Autoignition Temperature	427°C
Critical Temperature	446.85^{o}C
Critical Pressure	8.2 MPa
Critical Specific Volume	0.191 L/gmol
Refractive Index	1.4306
Specific gravity	1.1153
Surface Tension at 25°C	48 mN/m
Vapour Pressure at 20°C	0.0075 kPa
Flash point	137.8^{o}C
Dielectric Constant at 25°C	37.7
Electrical Conductivity at 20°C	1.07*10^{-6} mhos/cm

1.2 Applications

Table 1.3: Application of Ethylene Glycol

Properties	Applications
Chemical Intermediate for Resins	• Polyester resins (fibers, containers and films) • Resin esters as plasticizers (adhesives, lacquers and enamels) • Alkyd-type resins (synthetic rubbers, adhesives, surface coatings)
Solvent Coupler	• Stabilizer against gel formation
Freezing Point Depression	• Deicing fluids (aircraft, runway) • Heat transfer fluids (gas compressors, heating, ventilating, air conditioning, process chillers, ice rinks) • All-weather automotive antifreeze and coolants • Water-based formulations (adhesives, latex paints,asphalt emulsions)
Solvent	• Medium for suspending conductive salt in electrolytic capacitors
Humectant (property of preserving moisture)	• Textile fibers • Paper • Leather • Adhesives • Glue
Chemical Intermediate	• Solvent

1.2 Market

(Chemical & Petrochemicals Manufacturers Association, India)

Ethylene glycol was first prepared in 1859 by the French chemist Charles-Adolphe Wurtz from ethylene glycol diacetate via saponification with potassium hydroxide and, in 1860, from the hydration of ethylene oxide. There appears to have been no commercial manufacture or application of ethylene glycol prior to World War I, when it was synthesized from ethylene dichloride in Germany and used as a substitute for glycerol in the explosives industry. In the United States, semi-commercial production of ethylene glycol via ethylene chlorohydrin started in 1917. The first large-scale commercial glycol plant was erected in 1925 at South Charleston, West Virginia, by Carbide and Carbon Chemicals Co. (now Union Carbide Corp.). By 1929, ethylene glycol was being used by almost all dynamite manufacturers. In 1937, Carbide started up the first plant based on Lefort's process for vapour-phase oxidation of ethylene to ethylene oxide. Carbide maintained a monopoly on the direct oxidation process until 1953, when the Scientific Design process was commercialized and offered for licenses.

Shell, Equistar SABIC, INEOS, LyondellBasell, Reliance Industries Ltd, Akzo Nobel, BASF, Clariant, Dow Chemical, Huntsman, LG Chem, Mitsubishi Chemical Corp, Mitsui Chemicals, Sasol, Shanghai Petrochemical, Sinopec are some of the leading producers of MEG in the world.

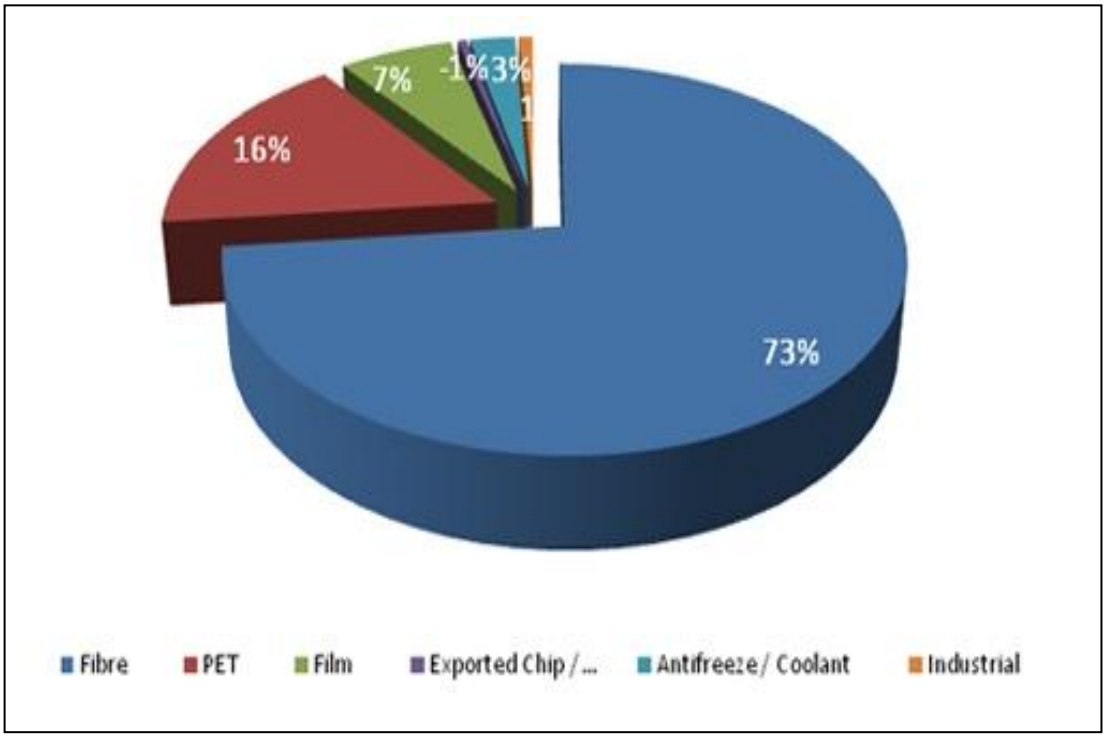

Figure 1.1: Consumption scenario of Ethylene Glycol

In India ethylene glycol is manufactured by many small scale industries with different technologies, but there are three main industries which manufactures ethylene glycol on large scale.

Table 1.4: Ethylene Glycol production capacities

Industries	**Capacity in 2013-14 (kt)**	**Predicted capacity in 2014-15 (kt)**	**Predicted capacity in 2015-16 (kt)**
RIL (Reliance Industries ltd.)	800	800	1500
IGL (Indian Glycol ltd.)	150	150	150
IOC (Indian Oil Carporation)	350	350	350

Indian industries are not producing ethylene glycol to the extent which we need. So every year we need to import some amount of ethylene glycol from other countries. Following table will give us brief idea of India's demand supply for MEG.

Table 1.5: MEG-India Demand Supply

Indian Producers	**2013-14**	**2014-15(prediction)**	**2015-16(prediction)**
Capacity (kt)	1300	1300	2000
Actual Production (kt)	1114	1114	1847
Imports (kt)	1274	1550	1126
Exports (kt)	85	85	85
Actual Consumption (kt)	2303	2579	2888

2. EXECUTIVE SUMMARY

This homepaper is about the design to manufacture 200000TPA of Ethylene Glycol. Making the best use of the available information at this stage, this document serves as the first level of information like pre-feasibility report. Some of its chapters cover greater detail and other preliminary information.

The Product and its Uses: Ethylene glycol (EG) is an important organic compound and chemical intermediate used in a large number of industrial processes (e.g. energy, plastics, automobiles, and chemicals). Molecular formula for Ethylene Glycol is $HO\text{-}CH_2\text{-}CH_2\text{-}OH$. Ethylene Glycol is used in industry for many applications such as Chemical intermediate for resins, Solvent coupler, Freezing point depressant, Solvents in electrolytic applications and also as Humectant in paper or textile industries.

The Sales Turnover: At an annual production of 200000TPA of Ethylene Glycol and current price of Rs.75/kg, the sales turnover would amount to about Rs. 1500Crores/year. Di-ethylene glycol and Tri-ethylene glycol as a by product will generate additional sales revenue of about Rs. 265Crores/year, with total sales turnover touching around Rs. 1765Crores/year.

The raw materials and Chemicals as Inputs: Ethylene and Oxygen are raw materials required in this process. The annual cost at a consumption of Ethylene: 131833 TPA and price of Rs.75/kg, would amount to Rs.988.7Crores and Oxygen: 132367 TPA and price of Rs.18/kg would amount to Rs.238.2Crores. Silver catalyst which is required at 8.8 TPA *(averaged value)* at Rs.30000/kg is Rs.26.4Crores per annum. Total cost of inputs amounts to Rs.1253Crores/year (about 71% of sales turnover).

Cost of Production: The annual gross cost of production works out to be Rs.1622.2Crores (92% of sales turnover) comprising the raw material cost of Rs.1240.3Crores, utilities of Rs.128.32Crores and others the rest. Unit cost of production equals is Rs.70.56/kg

Project Information: Of the required Total Fixed Capital Investment of Rs. 402.68Crores, considering a depth to equity ratio of 2:1, Rs. 268.46Crores would be raised through term loans and the balance Rs 134.22Crores by equity participation. (Promoters=51%, Institutional

participation=20%, Public issue=29%). The working capital(WC) requirement is Rs.18.84Crores, out of which Rs. 14.13Crores (75% of total WC) will be raised through borrowing at 16% interest per annum. The payback is 36 months and ROI is 35.4% with profit margin of 8.1%, and break even capacity at 71.42%.

Process Description: The process for production of glycol is commercialised by many refineries. It involves the oxidation of ethylene using pure oxygen in presence of silver catalyst at around 15bar pressure and 250°C temperature. Ethylene oxide formed in this reaction is then treated with water at 30bar and 200°C in tubular reactor to give final product as MEG, DEG, TEG and excess water. This mixture is then concentrated in evaporators and then distilled in series of distillation columns to get separate pure MEG, DEG and TEG.

Project Site: Considering conventional considerations related to project profitability, productivity and national interest, the project is proposed to be located at the Jamnagar District of Gujarat.

Material Balance: Process flow diagram identifies multiple flow streams, compositions of which are thereby listed.

Safety, Health and Environment: Chemicals in plant are in both liquid as well as gaseous state. Gases like ethylene and ethylene oxide have very high fire hazard. All products are in liquid state and they have no severe hazards. The MSDS of the reactants and products are attached in the Annexure. Waste generated in this plant is mainly gaseous CO_2 which is allowed to vent in atmosphere.

Utilities: The utilities required are MP steam, HP steam, cooling water, dowtherm and power costing Rs. 128.33Crores annually. Of this, power is the largest costing utility, Rs. 75.84Crores.

Conclusion: The Ethylene Glycol manufacturing plant outlined here is safe, technically feasible and economically viable. The proposal gives adequate inputs/clear insights into the project and enables initiation of feasibility study.

3. LITERATURE SURVEY

Literature survey is one of the very important step in designing of any plant. There are various ways in which we can manufacture our desired product. So for selection of our process we first need to go through various possible ways of doing it. There are different processes which can be used for production of ethylene glycol are described below.

3.1 Conversion of cellulose

Cellulose is widely available in nature and to fulfil today's need of ethylene glycol, much research is going on in field of glycols from cellulose. First step in this process is hydrolysis of cellulose to glucose in presence of nickel catalyst. (Ooms et al., 2014)

$$\text{Cellulose} + H_2O \xrightarrow{Ni\text{-}W_2C} \text{Glucose}$$

Glucose so formed in above reaction is hydrogenated in presence of different catalysts.

$$\text{Glucose} + H_2 \xrightarrow{\text{Ni-W-Carbide}} \text{Ethylene glycol} + \text{Other polyols}$$

This reaction is carried out at 513K temperature. Conversion in this case is 80% with carbide catalyst. Along with ethylene glycol many other polyols are formed in this reaction.

3.2 From Glycerol

Glycerol is major by-product in production of biodiesel industry. This glycerol can be converted into ethylene glycol via process of hydrogenation. (Yue et. al, 2012)

$$\text{Glycerol} + H_2 \xrightarrow{\text{Cat.}} \text{Ethylene glycol} + \text{1,2-propanediol} + \text{1,3-propanediol} + H_2O$$

Table 3.1: Catalysts for Glycerol conversion to Ethylene Glycol

Sr. No.	Catalyst	P(MPa)	T(K)	Conversion	Selectivity
1	0.5%Pt+5%Ni/Al_2O_3	8	453	64	42

2	Rh+5%Ni/ Al_2O_3	8	453	11	32
3	Ru/CNTs	4	473	82.9	23
4	Ru/TiO_2	4	473	81.8	12.1
5	Ru/ Al_2O_3	4	473	80	11.2
6	Ru/C	8	473	29	40

3.3 Hydrogenolysis of biomass-derived xylitol to ethylene glycol

The selective hydrogenolysis of xylitol to ethylene glycol and propylene on Ni/C catalyst in the presence of solid bases, e.g. $Ca(OH)_2$ and CeO_2, physically mixed with or co-supported with Ni on C. Reaction conditions: 473 K, 4.0 MPa H2, 40 g 10 wt% xylitol aqueous solution. Other products formed in this hydrogenolysis are Glycerol, Arabitol, Threitol. So selectivity toward ethylene glycol in this process is much less as compare to other processes. (Sun & Liu, 2014)

Table 3.2: Catalysts for Xylitol conversion to Ethylene Glycol

Sr. No.	**Catalyst**	**Selectivity towards Ethylene Glycol**	**Selectivity towards Propylene Glycol**
1	Ni-CaO/C	28.3	33.5
2	Ni-BaO/C	26.7	30.7
3	Ni-MgO/C	22.4	27.3
4	Ni-Ce_2O/C	25.6	31.6
5	Ni-La_2O_3/C	23.2	29.8

3.4 From Formaldehyde and Methanol

In this reaction formaldehyde is treated with CO and H_2O to give glycolic acid. This reaction is exothermic reaction after this the reaction mixture is treated with methanol to give methyl glycolate (MEG). (Celik et. al, 2008)

$$HCHO + CO + H_2O \rightarrow HOCH_2COOH$$

$$HOCH_2COOH + CH_3OH \rightarrow HOCH_2COOCH_3 + H_2O$$

$$HOCH_2COOCH_3 + 2H_2 \rightarrow HOCH_2CH_2OH + CH_3OH,$$

Previously DuPont practiced this method with 96% H_2SO_4 as catalyst and 900atm pressure of CO with around 473K temperature. Such extreme conditions led to tremendous corrosion and shutting of plant. 48% yield of GA with CO pressure as low as 102 atm using Nafion perfluorosulfonic acid resin at 150°C, and 79% yield at 313 atm . The high-pressure requirement of formaldehyde carbonylation is due to low solubility of CO in the liquid phase.

3.5 Trans-esterification of methanol and ethylene carbonate

Ethylene glycol can also be synthesized concurrently with dimethyl carbonate (DMC) by a trans-esterification reaction between ethylene carbonate(EC) and methanol. (Bhanage et. al, 2002)

Ethylene carbonate + 2Methanol $\longrightarrow$ Ethylene glycol + Dimethyl carbonate

Table 3.3: Catalyst and yield for trans-esterification of methanol and ethylene carbonate

Sr. No	Catalyst	EG Yield
1	Rare earth oxide such as yttrium or cerium oxide	30%
2	Smectites containing magnesium and/or nickel species	50%
3	Weakly basic catalyst—macro-reticular anion-exchange resin (Amberlyst A-21)	36%
4	Homogeneous system, poly-4- vinyl pyridine	75%

Basic cost estimation with 70% conversion and 90% selectivity:

Table 3.4: Economical analysis of trans-esterification of methanol and ethylene carbonated

Sr. No.	Component	Cost/kg	Amount w.r.t 1 kg of ethylene glycol	Total cost
1	EC	100	1.855kg	185.5
2	MeOH	20	1.35kg	27
3	DMC	65	1.45kg	94.25
4	EG	70	1kg	70

So for 1 kg production of EG,

total reactant cost = Rs 212.5

total product cost = Rs 165

As reactant cost is much higher than product cost, we can say that this process is not economical.

3.6 Ethylene and Hydrogen Peroxide

Direct synthesis of ethylene glycol from ethylene and hydrogen peroxide is a green technology consisting of a coupling process, namely, epoxidation of ethylene and sequential hydrolysis of ethylene oxide. (Yue et al., 2012)

$$\text{Ethylene} + H_2O_2 \longrightarrow \text{Ethylene glycol}$$

Due to its bifunctional properties (e.g., oxidation and hydrolysis), an Al-TS-1 catalyst was introduced for ethylene epoxidation and the ring-opening process for ethylene glycol.

The catalyst (with a SiO_2/Al_2O_3 molar ratio of 504) offered a conversion of H_2O_2 of 95% and a total yield of EG as 10% under mild conditions (0.7 MPa, 333 K).

3.7 From Syngas

Syngas (i.e. CO + H_2) can be used to manufacture ethylene glycol. This process basically involves two steps. In first step dimethyl oxalate(DMO) is formed from CO and alkyl nitrite. This will lead to evolution of NO. In practise Evolution of NO is toxic but in this reaction sequence we use NO to regenerate alkyl nitrite. (Ma et al., 2013)

$$2CO + 2RONO \longrightarrow DMO + 2NO$$

Above reaction is carried out at 80-120°C and 1atm pressure. Catalyst used in this reaction is 1%Pd/α-Al_2O_3. NO formed in this reaction reacts with alcohol and oxygen to regenerate alkyl nitrite.

$$2NO + 2ROH + 0.5O_2 \longrightarrow 2RONO + H_2O$$

DMO so formed in first reaction reacts with pure hydrogen to give ethylene glycol and alcohol. This alcohol is used in regeneration of alkyl nitrite.

$$2DMO + H_2 \longrightarrow \text{Ethylene glycol} + 2ROH$$

Selectivity of first reaction is upto 85% while that of third reaction can be obtained upto 98%.
H_2/DMO(molar ratio) = 50 while T=473K
Also with 25% Cu/Al catalyst we can get conversion of hydrogenation reaction upto 100%.

3.8 Ethylene Oxidation followed by Hydrolysis

This process is widely used in industries. There are two main steps which are included in this reaction. First step is oxidation of ethylene to ethylene oxide in presence of silver catalyst. This oxidation will lead to production of ethylene oxide. (Ullmann's enc.,2002)

$$C_2H_4 + 0.5O_2 \longrightarrow C_2H_4O$$

Temperature: 250°C , Pressure: 15atm

Ethylene oxide so formed in this reaction is then treated with water to yield ethylene glycol.

$$C_2H_4O + H_2O \longrightarrow C_2H_6O_2$$

Temperature: 200°C, Pressure: 30bar

Yield of first process is around 80% while that of second process is about 94%.

Also if we look at the economics of this process for 1 kg production of ethylene glycol, we get the following result.

Table 3.5: Economical analysis of epoxidation process followed by hydrolysis

Sr. No.	**Component**	**Cost/kg**	**Amount w.r.t 1 kg of ethylene glycol**	**Total cost**
1	Ethylene	75	0.6	45
2	Oxygen	18	0.145	2.6
2	Ethylene Glycol	75	1	75

So here product cost is Rs27.4/kg more than reactant cost so we can say that the above process is economical.

4. PROCESS SELECTION

Table 4.1: Processes selection

Sr. No.	Process	Process Conditions	Yield for EG	Comments
1	Cellulose to EG	T=513K Cat= Ni-W/Car	Around 60%	• Comparatively less yield • Higher number of by-product formation so separation is difficult
2	Glycerol to EG	T=453-473K P=4 or 8 MPa Cat=Ru based	Max 25%	• Yield is very low as compare to other processes • Formation of more than 4 by-products again making separation difficult
3	Xylitol to EG	T=473K P=4 MPa Cat=Ni in presence of solid bases	Max selectivity of 25%	• Green process but with very low yield • By-products such as propylene glycol, Glycerol, Arabitol, Threitol are formed.
4	Formaldehyde to EG	T= 150-200°C P=few hundred atm Cat= acid catalysts	Upto 90-94%	• CO solubility is less so we need very high pressures • Maintaining such Pressure conditions is difficult • Acid catalyst like (H_2SO_4) leads to severe damage to equipments.
5	Trans-esterification of MeOH & EC	T= 350K Cat= amberlyst	Max 75%	• Yield in this process is quite good • But economically reaction is

				not favoured • Less availability of Ethylene carbonate
6	Ethylene + H_2O_2	T=333K P=0.7MPa Cat=SiO_2/Al_2O_3	Only 10%	• Yield is least amongst listed processes • H_2O_2 is corrosive in nature.
7	From Syngas	T=473K H_2/DMO=50 Cat=25%Cu/Al	Around 75%	• Separation of syngas into pure CO and H_2 is difficult • Presence of H_2 in first step of DMO formation will lead to decrement in rate of desired reaction
8	Direct Ethylene oxidation	T=473-523K P=15-30bar Cat=silver Catalyst	Around 70-80%	• One of the good yield amongst listed processes • Economic analysis shows profitability in this process • Availability of raw material • Simple process • Less amount of di,tri-ethylene glycol formation

So, on the basis of above comparison process no.8 i.e. ‘Direct oxidation of ethylene followed by hydrolysis is selected as production process.

5. SITE SELECTION

The project site selection is a very important pre-project planning activity. The site has a considerable impact on the performance of the project during its life cycle. The project profitability and productivity are site specific. The entire site selection exercise can be divided into three basic factors: (Mahajani & Mokashi, 2005)

• Prosperity factors: Prosperity of the nation and the community

• Profitability factors: Project profitability

• Productivity factors: Productivity of the plant

The several main factors that are important in selection of the site are as follows:

5.1 PROSPERITY FACTORS:

These factors are linked to the dispersal of industries and economic development of backward regions, keeping in mind the appropriate use of available resources and national security issues.

5.1.1 Dispersal of Industries:

Economic imbalance and strain on available resources, land, and utilities have led to development of industrial estates in areas away from metropolitan cities. Our aim should be to get the land at a cheaper cost, but make sure the site has access to the utilities required for production. It would be an added advantage to have tax benefits and lower tariffs for power and water in industrially backward areas.

5.1.2 National Security:

Considering the weapon development programs all over the world, the risks are more or less equal whether the plants are near hostile borders or away from them. However, to be on a safer side, we would like to have the project site away from the hostile borders of the country.

5.1.3 Appropriate Use of Resources:

The consumption of energy resources would be too high if the products are not produced near the market place or the plant is not located near the availability of raw materials.

5.2 PROFITABILITY FACTORS:

These are the factors which have a direct bearing on the project cost as well as the cost of production.

5.2.1 Land:

The price of land is directly reflected in the cost of the project. Plot contours, seismic area mapping and other topographical factors also need to be taken into account.

5.2.2 Climatic Conditions:

The average rainfall and the intensity of rainfall have a direct bearing on the storm water drainage system. Higher rainfall is related to higher humidity and this would have a direct bearing on the cooling tower fixed cost and operating cost. It is an important consideration when the products are hygroscopic in nature and need to be stored in dry and cool conditions. Maximum and minimum temperatures at the plant site are important in deciding the capital and operating costs. Illustration for this can be cooling towers, air cooled heat exchangers, chilling. In most cases, lower temperature zones give a benefit not only in terms of energy efficiency, but also exergy efficiency of the entire plant. For example, it is much more efficient to have refrigeration units operating at ambient temperatures as low as possible.

5,2.3 Raw materials:

Availability of the raw material in the vicinity of the chemical projects cuts down on the part of transportation and handling during transportation. Thus the location selected must be such that the raw materials are available in the vicinity. The raw material required for our process is ethylene. About 130000 *TPA* of ethylene will be required. Since the quantum required is very huge, transportation factors will have immense impact on the overall cost of production. Along with cost of transportation, maintaining huge inventories is a major disadvantage in keeping the production plant away from the source of raw material.

5.2.4 Product Market:

Vicinity to product market is a crucial factor just like vicinity to raw materials in some cases. Both location requirements can be contradictory, and in such cases we need to weigh both sides and make a more sound decision.

5.2.5 Water:

The plant requires water for generation of steam and for cooling purpose. Water is also required for general cleaning, for potable use in administration blocks, canteen, fire fighting etc. Water quality is very important because if the site does not provide ample amount of soft water then the utility cost can go up and the equipments would face danger of fouling.

5.2.6 Power:

The regular continuous availability of power is also important for the proper smooth functioning of the plant free from any delay in successive batches. The power tariff is reflected in the operating expenditure. If the power supply interruption is frequent at a site, we need to provide a diesel power generating set, which adds to the capital, as well as operating expenditure.

5.2.7 Environmental Aspects:

The site would influence the environmental management system (EMS) by way of capital and operating expenditure. Location decides the discharge standard for effluents because the water body where effluent discharge will be done will depend on the location of the site.

5.2.8 Housing and staff Transport:

If the site is remotely located, it needs housing for majority of the plant personnel. In addition, if the plant is away from the residential township and is not connected well by public transport system, then, we need to make provisions for the transport of the personnel.

5.2.9 Equipment Transport:

The delivery of fabricated equipment at the site is generally excluded from the scope of manufacturers. Therefore, one needs to add this transportation cost. Many times one needs to create appropriate infrastructure for transportation of heavy equipments if it is not developed previously. So this work is to be done in collaboration with local state industrial development corporation and public works departments etc.

5.2.10 Statutory Duties and Taxation:

In the backward regions, state government may offer concessions in sales tax and tariffs for water and power for a specified period.

This factor is also very important especially in a country like India where the administrative delays in approvals and licensing can transform a plausible fortune-making project to a

hapless one. This can play a very important role in deciding the speed with which the work is going to progress. The Government may offer concessions in sales tax (VAT) and tariffs for water and power for a specific period. The Central government may offer concessions in the excise duty and import duty. All these concessions not only affect the cost of the project but also its cost of production and enhance its profitability.

5.3 PRODUCTIVITY FACTORS:

Like profitability factors, certain factors cannot be quantified in terms of cost/ profit and yet, they influence the productivity of the plant considerably. The major factors are:

5.3.1 Communication:

Communication is necessary right from the project implementation stage. Communication facilities like telephone, fax, telex, internet etc. should be readily accessible to the site location.

Also, rail, road and air communication should be conducive, economically and technically.

5.3.2 Labour:

Availability of skilled labour and its stability is a major concern. There might be high absenteeism during farming and harvesting season, and when there are village festivals.

Further, the character of local labour (whether it is hostile or docile) is also an important factor to be considered before site selection.

5.3.3 Industrial Infrastructure:

Existence of a good industrial infrastructure i.e., availability of welding facilities, cutting facilities, some workshops having lathes, cutting machines, drilling machines etc. is important.

5.3.4 Civic Amenities:

Civic amenities like playing ground, cinema theatre, place of recreation etc. should be available at the housing or the company should provide them. These are the needs of the workers and their availability helps in motivating the plant personnel and their happiness, which in turn increases the productivity of the project.

The sources of raw material:

Ethylene

1. Reliance industries ltd. (Jamnagar, Gujarat)
2. Reliance industries ltd. (Nagothane, Maharashtra)
3. Reliance industries ltd. (Dahej, Gujarat)
4. Indian Oil Corporation (Haldia, West Bengal)
5. Haldia Petrochemicals (Haldia, West Bengal)
6. GAIL (Barauni, Bihar)

Product market:

In order to increase the prosperity factor, one may locate the industry in an industrially backward area. In such a case, the market of the product may be far away from the manufacturing site. Hence, the manufacturer has to increase the product inventory and this increases the cost of the onsite storage facilities as well as the working capital. It also incurs additional cost for transportation. The major industries that sell Ethylene are:

1. Reliance Industries
2. Indian Glycol Ltd.
3. Indian Oil Corporation.

So depending upon the above mentioned parameters and also the availability of raw material three sites in three different states have been selected for further analysis. Those 3 sites are

1. Jamnagar, Gujarat
2. Nagothane, Maharashtra
3. Haldia, West Bengal

Table 5.1: Sites comparison

Factors	Relative importance on the scale of 10	Scores		
		Nagothane, Maharashtra	**Jamnagar, Gujarat**	**Haldia, West Bengal**
1. PROSPERITY FACTORS				
Dispersal of Industries	8	5	8	7
Nation's Security	5	5	3	4
Appropriate Use of Natural Resources	9	7	8	7
2. PROFITABILITY FACTORS				
Land	6	5	5	5
Climatic Conditions	6	6	5	5
Raw Material	10	8	10	9
Product Market	9	7	9	8
Water	8	7	7	7
Power	9	7	9	8
Environmental Aspects	6	4	4	5
Housing & Staff Transportation	5	4	4	4
Equipment Transportation	5	3	4	4
Support from State Government	9	7	9	6
3. PRODUCTIVITY FACTORS				
Communication	6	5	6	5
Labour	7	6	6	6

Industrial Infrastructure	8	5	7	6
Civic Amenities	7	5	6	5
	123	96	110	101
	Rating on 10	7.80	8.94	8.21

So on the basis of above comparison, Site selected for ethylene glycol production is Jamnagar district in Gujarat.

6. THERMODYNAMICS OF REACTION

Thermodynamics of reaction will ensure the feasibility of the reaction. There are two main reactions which lead to formation of ethylene glycol. First reaction is oxidation of ethylene while second one is hydrolysis of ethylene glycol. In first reaction all reactants and products are in gaseous state while in second reaction one reactant is in gaseous state while other is in liquid state.

6.1 Ethylene oxidation:

In this reaction gaseous ethylene is reacted with gaseous oxygen to give gaseous ethylene oxide. Reaction temperature for this process is 250°C and reaction pressure is 15 atm.

$$C_2H_4 + 0.5O_2 \longrightarrow C_2H_4O$$

So for estimation of its thermodynamic feasibility we are going to need following data:

Table 6.1: Thermo-physical constants for compounds in oxidation reaction

Sr. No.	Component	$(\Delta G^o_{f,298})$(kJ/mol)	$(\Delta S^o_{f,298})$(kJ/molK)	$(\Delta H^o_{f,298})$(kJ/mol)
1	Ethylene(g)	68.44	0.212	52.51
2	Oxygen(g)	0	0.205	0
3	Ethylene oxide(g)	-13.23	0.242	-52.63

(Perry's handbook)

From this constants and reaction stoichiometry we can calculate the thermo-physical constants for reaction.

$$(\Delta H^o_{R,298}) = (\Delta H^o_{f,298})_{EO} - (\Delta H^o_{f,298})_{E} - 0.5 * (\Delta H^o_{f,298})_{O}$$

= -105.14 kJ/mol

$$(\Delta S^o_{R,298}) = (\Delta S^o_{f,298})_{EO} - (\Delta S^o_{f,298})_{E} - 0.5 * (\Delta S^o_{f,298})_{O}$$

= -72.5 J/molK

$$(\Delta G^o_{R,298}) = \left(\Delta G^o_{f,298}\right)_{EO} - \left(\Delta G^o_{f,298}\right)_{E} - 0.5 * \left(\Delta G^o_{f,298}\right)_{O}$$

= -81.67 kJ/molK

Reaction is taking place at T=523K and P=15atm. At this temperature and pressure gases will not behave ideally. So we have to interpolate the values of enthalpy, entropy and Gibbs free energy of reaction at these elevated P and T using equation of states.

Here we are using Peng Robinson(PR) equation of state.

$$P = \frac{RT}{v-b} - \frac{a*\alpha}{(v+\epsilon b)(v+\sigma b)}$$

Where,

Table 6.2: Constants in Peng Robinson EOS

ε	-0.4142
Σ	2.4142
A	$0.457(RTc)^2/Pc$
B	0.0777(RTc)/Pc
Pc	Critical pressure of component
Tc	Critical temperature of component

Change in entropy with variation in temperature and pressure from T_1, P_1 (298K, 1atm) to T_2, P_2 (523K, 15atm) can be given as,

$$\left(\Delta S^o_{f,523}\right)@15\text{atm} - \left(\Delta S^o_{f,298}\right)@1\text{atm}$$

$$= \left[\left\{\int_{\infty}^{v}\left(\left(\frac{dP}{dT}\right)_{v}+\frac{R}{v}\right)dv - Rln\left(\frac{RT}{Pv}\right)\right\}_{15atm,523K}\right]$$

$$+ \left[C_p \ln\left(\frac{T_2}{T_1}\right) + R\ln\left(\frac{P_1}{P_2}\right)\right]$$

$$- \left[\left\{\int_{\infty}^{v}\left(\left(\frac{dP}{dT}\right)_{v}+\frac{R}{v}\right)dv - Rln\left(\frac{RT}{Pv}\right)\right\}_{1atm,298K}\right]$$

Similarly change in enthalpy from one pressure temperature condition (1atm, 298K) to other condition (15atm, 523K) is given by,

$$\left(\Delta H^{o}_{f,523}\right)@15atm - \left(\Delta H^{o}_{f,298}\right)@1atm$$

$$= \left[\left\{\int_{\infty}^{v}\left(T\left(\frac{dP}{dT}\right)_{v} - P\right)dv + Pv - RT\right\}_{15atm,523K}\right]$$

$$+ \left[\int_{298}^{523} c_p dT\right]$$

$$- \left[\left\{\int_{\infty}^{v}\left(T\left(\frac{dP}{dT}\right)_{v} - P\right)dv + Pv - RT\right\}_{1atm,298K}\right]$$

Table 6.3: Critical conditions of components

Sr. No.	Component	Tc (K)	Pc (MPa)	Ω
1	Ethylene(g)	282.34	5.04	0.0862
2	Oxygen(g)	154.58	5.043	0.0222
3	Ethylene oxide(g)	469.15	7.19	0.1974

(Perry's handbook)

Also specific heat is a function of temperature so we need to provide equation for specific heat calculation in terms of temperature.

Table 6.4: Constants for specific heat calculation of gaseous components

Sr. No.	Components	C1	C2	C3	C4	C5
1	Ethylene(g)	33380	94790	1596	55100	740.8
2	Oxygen(g)	29103	10040	2526.5	9356	1153.8
3	Ethylene oxide(g)	33460	121160	1608.4	82410	737.3

(Perry's handbook)

$$C_p\left(\frac{J}{kmol}\right) = C1 + C2\left(\frac{\left(\frac{C3}{T}\right)}{\sinh\left(\frac{C3}{T}\right)}\right)^2 + C4\left(\frac{\left(\frac{C5}{T}\right)}{\sinh\left(\frac{C5}{T}\right)}\right)^2$$

Once we get the values of enthalpy and entropy of all components at reaction conditions, we can easily find out the values of reaction enthalpy and reaction entropy. Having that we can use the following equation to calculate Gibbs free energy of reaction at reaction conditions.

$$\Delta G = \Delta H - T\Delta S$$

Table 6.5: Thermo-physical properties of components in oxidation reaction at reaction conditions

Sr. No.	Component	$(\Delta S^o_{f,523})$(kJ/molK)	$(\Delta H^o_{f,523})$(kJ/mol)
1	Ethylene(g)	0.244	64.473
2	Oxygen(g)	0.216	6.7979
3	Ethylene oxide(g)	0.273	-38.953

$$(\Delta H^o_{R,523}) = (\Delta H^o_{f,523})_{EO} - (\Delta H^o_{f,523})_E - 0.5 * (\Delta H^o_{f,523})_O$$

= -106.82 kJ/mol

$$(\Delta S^o_{R,523}) = (\Delta S^o_{f,523})_{EO} - (\Delta S^o_{f,523})_E - 0.5 * (\Delta S^o_{f,523})_O$$

= -79.1 J/molK

$$\left(\Delta G^o_{R,523}\right) = \left(\Delta H^o_{R,523}\right) - T * \left(\Delta S^o_{R,523}\right)$$

= -65.13 kJ/mol

As $\left(\Delta G^o_{R,523}\right)$ of reaction is negative, we can say that the reaction of oxidation of ethylene is feasible at given reaction conditions.

6.2 Ethylene oxide Hydrolysis:

In this reaction the ethylene oxide which is formed in previous reaction reacts with water to give ethylene glycol. Reaction temperature is given as 200°C while pressure is given as 30bar.

$$C_2H_4O + H_2O \longrightarrow C_2H_6O_2$$

So for estimation of its thermodynamic feasibility we are going to need following data:

Table 6.6: Thermo-physical constants for compounds in hydration reaction

Sr. No.	Component	$\left(\Delta G^o_{f,298}\right)$(kJ/mol)	$\left(\Delta S^o_{f,298}\right)$(kJ/molK)	$\left(\Delta H^o_{f,298}\right)$(kJ/mol)
1	Ethylene Glycol(l)	-323.21	0.1169	-454.8
2	Water(l)	-237.18	0.0699	-285.8
3	Ethylene oxide(g)	-13.23	0.242	-52.63

(Chemistry-reference)

From this constants and reaction stoichiometry we can calculate the thermo-physical constants for reaction.

$$\left(\Delta H^o_{R,298}\right) = \left(\Delta H^o_{f,298}\right)_{EG} - \left(\Delta H^o_{f,298}\right)_{EO} - \left(\Delta H^o_{f,298}\right)_{W}$$

= -116.37 kJ/mol

$$\left(\Delta S^o_{R,298}\right) = \left(\Delta S^o_{f,298}\right)_{EG} - \left(\Delta S^o_{f,298}\right)_{EO} - \left(\Delta S^o_{f,298}\right)_{W}$$

= -0.1959J/molK

$$(\Delta G^o_{R,298}) = \left(\Delta G^o_{f,298}\right)_{EG} - \left(\Delta G^o_{f,298}\right)_{EO} - \left(\Delta G^o_{f,298}\right)_{W}$$

= -72.8kJ/mol

Reaction is taking place at 473K and 30bar pressure so we need to find the enthalpy and entropy of each component at these conditions. For that we will require specific heat capacity equations for all components. Out of three components 1 i.e. ethylene oxide properties are already mentioned in previous reaction calculation

Table 6.7: Constants for specific heat calculation of liquid components

Sr. No.	Components	C1	C2	C3	C4	C5
1	Ethylene Glycol(l)	35540	436.78	-0.1848	-	-
2	Water(l)	276370	-2090.1	8.125	-0.0141	$9.37*10^{-6}$

(Perry's handbook)

$$C_p\left(\frac{J}{kmol}\right) = C1 + C2 * T + C3 * T^2 + C4 * T^3 + C5 * T^4$$

So, for liquids we can calculate entropy of component at reaction temperature as

$$\Delta S^o_{f,473} = \Delta S^o_{f,298} + \int_{298}^{473} \frac{C_p}{T} dT$$

Similarly,

$$\Delta H^o_{f,473} = \Delta H^o_{f,298} + \int_{298}^{473} C_p dT$$

Table 6.8: Thermo-physical properties of components in hydration reaction at reaction conditions

Sr. No.	Component	$(\Delta S^o_{f,473})$(kJ/molK)	$(\Delta H^o_{f,473})$(kJ/mol)
1	Ethylene Glycol(l)	0.1972	-424.02
2	Water(l)	0.1049	-272.18

3	Ethylene oxide(g)	0.2424	-44.44

$$\left(\Delta H^o_{R,473}\right) = \left(\Delta H^o_{f,473}\right)_{EG} - \left(\Delta H^o_{f,473}\right)_{EO} - \left(\Delta H^o_{f,473}\right)_{W}$$

= -107.6 kJ/mol

$$\left(\Delta S^o_{R,473}\right) = \left(\Delta S^o_{f,473}\right)_{EG} - \left(\Delta S^o_{f,473}\right)_{EO} - \left(\Delta S^o_{f,473}\right)_{W}$$

= -150.1 J/molK

$$\left(\Delta G^o_{R,473}\right) = \left(\Delta H^o_{R,473}\right) - T * \left(\Delta S^o_{R,473}\right)$$

= -36.6 kJ/mol

So the negative value of Gibbs free energy shows that hydration reaction of ethylene oxide is feasible at 473K and 30bar pressure.

7. KINETICS OF REACTION

7.1 Ethylene Oxidation:

Ethylene oxidation is carried out at 15atm pressure and 523K temperature. Main product which we get in this oxidation is ethylene oxide but along with ethylene oxide some side products such as CO_2 and water are also forms in this reaction.

This reaction is carried out in presence of silver catalyst so rate of reactions are strongly depend upon rate of adsorption of ethylene on catalyst. (Dettwiler et al., 1979)

Consider first reaction,

$$C_2H_4 + 0.5O_2 \xrightarrow{k1} C_2H_4O$$

for this reaction rate expression is given as

$$r_1 = k_1 \frac{[C_2H_4]K_{C_2H_4}}{1 + [C_2H_4]K_{C_2H_4}}$$

Experimental data from literature indicates

$$r_1 = \frac{1.96 \exp\left(-\frac{2400}{RT}\right)[C_2H_4]}{1 + 0.00098 \exp\left(\frac{11200}{RT}\right)[C_2H_4]}$$

Second reaction is complete oxidation of ethylene which can be written as

$$C_2H_4 + 3O_2 \xrightarrow{k2} 2CO_2 + 2H_2O$$

for this reaction rate expression is given as

$$r_2 = k_2 \frac{[C_2H_4]K_{C_2H_4}}{1 + [C_2H_4]K_{C_2H_4}}$$

Experimental data from literature indicates

$$r_2 = \frac{0.0936 \exp\left(-\frac{6400}{RT}\right)[C_2H_4]}{1 + 0.00098 \exp\left(\frac{11200}{RT}\right)[C_2H_4]}$$

Third reaction is basically an oxidation of ethylene oxide to carbon dioxide and water.

$$C_2H_4O + 2.5O_2 \xrightarrow{k3} 2CO_2 + 2H_2O$$

Rate expression for this reaction is given by

$$r_3 = \frac{0.42768 \exp\left(-\frac{6200}{RT}\right)[C_2H_4O]^2}{1 + 0.000033 \exp\left(\frac{21200}{RT}\right)[C_2H_4O]^2}$$

in first and second reaction, rate law has a term $K_{C_2H_4}$. This term takes care of adsorption of ethylene on silver catalyst. It is basically adsorption equilibrium constant for ethylene.

This constant does not appear in third reaction because third reaction is an oxidation of product formed in first reaction.

7.2 Hydrolysis of ethylene oxide:

Hydrolysis of ethylene oxide which is the product of oxidation reaction is carried away at 473K temperature and 30bar pressure. Ethylene oxide reacts with water in liquid phase in following manner,

$$C_2H_4O + H_2O \longrightarrow C_2H_6O_2$$

Rate of reaction is given as, (Melhem et. al 2001)

$$r_1 = k_1[EO][H_2O][ROH]^2$$

Where r_1 is in kmol/m^3/s and k_1 is Arrhenius factor given by,

$$k_1 = A\exp\left(-\frac{E}{RT}\right)$$

$$where, A = 338\left(\frac{m^3}{kmol}\right)^3 s^{-1} \quad and \quad E = 18880\ cal/gmol$$

[ROH] in the expression of rate law represents the concentration of water, ethylene glycol, diethylene glycol, triethylyne glycol and other hydroxyl compounds.

These di,tri-ethylene glycols are formed when ethylene oxide reacts with ethylene glycol. So it affects the rate of reaction.

8. BLOCK DIAGRAM

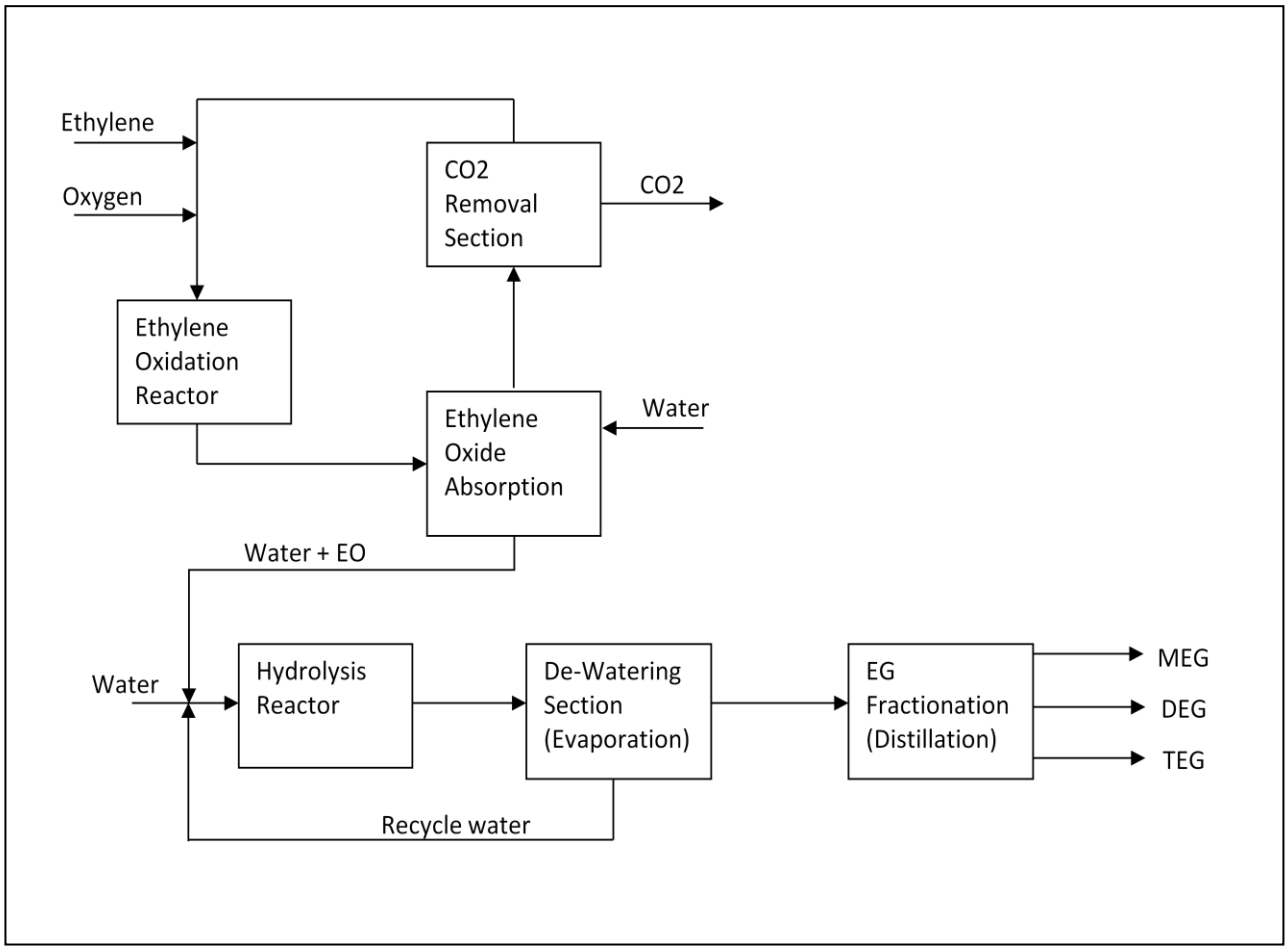

Figure 8.1: Block diagram

9. PROCESS DESCRIPTION

Process selected for ethylene glycol production is direct oxidation of ethylene followed by hydrolysis. There are various sections in this process which ultimately yields pure ethylene glycol.(Ullmann's enc., 2002)

Ethylene Oxide Reactor:

- The reaction between ethylene and oxygen is carried out in a multi-tubular, fixed bed type reactor, with a silver oxide catalyst in the tubes and a coolant on the shell side. The heat generated by the exothermic reactions is removed by the coolant, and is recovered by producing steam. The steam is used as a heating medium in various sections of the plant.
- A large gas flow is circulated continuously through the EO reactors. Reaction products (EO, carbon dioxide and water) are removed from the circulating gas while unconverted oxygen and ethylene are recycled back to the reactor.
- A vent stream is taken from the recycle gas in order to reduce the build-up of inerts like carbon dioxide impurities present in the ethylene and oxygen feedstocks. The inerts vent is typically used as fuel gas and burned (e.g. in a cracker furnace or steam boiler). Make-up ethylene and oxygen are added to the recycle gas loop.

EO Absorption:

- EO is recovered from the gaseous reactor effluent by absorption in water. The aqueous EO solution from the absorber is fed to Ethylene glycol reactor. The top stream of the EO absorber is fed to carbon dioxide removal section. Water used in this absorption is 8:1 by weight with respect to EO.

CO_2 Removal:

- Part of the recycle gas that leaves the EO absorber is routed through a column in which carbon dioxide (generated in the oxidation process) is removed by absorption in a hot potassium carbonate solution.
- The carbon dioxide is subsequently removed from the carbonate solution in a stripper. The carbon dioxide vent from the top of the stripper is either routed to atmosphere or

recovered for further use (e.g. carbonated drinks). The regenerated carbonate solution from the stripper bottom is cooled and recycled to the carbon dioxide absorber

Glycol Reactor:

- Glycols are manufactured by feeding a mixture of EO and water to a reactor that is operated at an elevated temperature of typically 200 °C. Under these conditions reaction rates are fast and no catalyst is required. Sufficient residence time is provided for complete conversion of EO.
- A reactor pressure of 30 barg is typically applied to avoid vaporisation of the EO. The reactor feed contains an excess of water in order to limit the adiabatic temperature rise and to enhance the selectivity to MEG.

Dewatering Section:

- The product stream from the glycols reactor contains the various glycol products and the excess of water. The excess water is removed by multiple effect evaporation with subsequent vacuum distillation and, after heat exchange, is recycled back to the glycols reactor.
- A bleed is taken from the water recycle to reduce the build-up of impurities. Low-pressure steam generated in this section is used as heating medium at various locations in the plant.

Glycol Purification:

- The water depleted crude glycol stream is fractionated in a number of vacuum columns to recover the individual glycol products at high purity level. The glycol products are cooled and routed to storage. The bottom stream from the last vacuum column contains the heavier glycols and can be sold for further glycols recovery or sent for disposal.

10. MATERIAL BALANCE

Capacity of ethylene glycol plant is given as 200000 TPA. As stated earlier ethylene glycol is manufactured from ethylene oxidation followed by hydrolysis.

Oxidation reaction is carried out at 250°C and 15bar pressure while hydration reaction is carried out at 200°C and 30bar pressure.

It is assumed that plant runs for about 8000 hours per year. So from this we can decide that our plant design should be of the capacity of 25TPH.

Product quality i.e. quality of ethylene glycol available in market is about 99.5%. So our aim is to prepare at least 99.5% pure ethylene glycol. Along with mono-ethylene glycol some amount of di-ethylene glycol and tri-ethylene glycol will also form in this process.

MEBC presented in this report is with respect to one hour. Total raw material requirement as well as consumption of energy for production of 25000 kg of ethylene glycol is calculated in this report.

10.1 Oxidation Reactor (R101)

Ethylene is oxidised to ethylene oxide as well as carbon dioxide. Silver catalyst is used in this reaction. Conversion of this reaction is assumed to be 30% while selectivity of ethylene to ethylene oxide is assumed to be 85%.

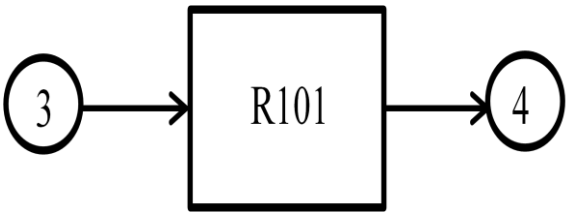

STREAM 3:

Table 10.1: Composition of stream 3

Input	MW	Mole/hr	Mass(kg/hr)
Ethylene	28.00	1956650.00	54786.20
Oxygen	32.00	3913300.00	125225.60
EO	44.00	1249.24	54.97
CO_2	44.00	525.08	23.10
Total		5871724.32	180089.87

This input is total input to the reactor but as some part is recycled to reactor actual fresh input to reactor is given by

Table 10.2: Composition of fresh inputs to R101

Fresh Input	MW	Mole/hr	Mass(kg/hr)
Ethylene	28.00	588542.66	16479.19
Oxygen	32.00	517060.94	16545.95
Total		1105603.60	33025.14

STREAM 4:

Table 10.3: Composition of stream 4

Output	MW	Mole/hr	Mass(kg/hr)
Ethylene	28.00	1369655.00	38350.34
Ethylene Oxide	44.00	500194.99	22008.58
CO_2	44.00	176623.58	7771.44

Water	18.00	176098.50	3169.77
Oxygen	32.00	3399679.38	108789.74
Total		5622251.44	180089.87

10.2 EO absorber (C101)

Water is used to absorb EO formed in reactor. This absorber is operated at 45°C. So at this temperature there will be some solubility of all gases in water.

EO is highly soluble in water so to absorb 95% EO we need 1.1 times water by weight of EO.

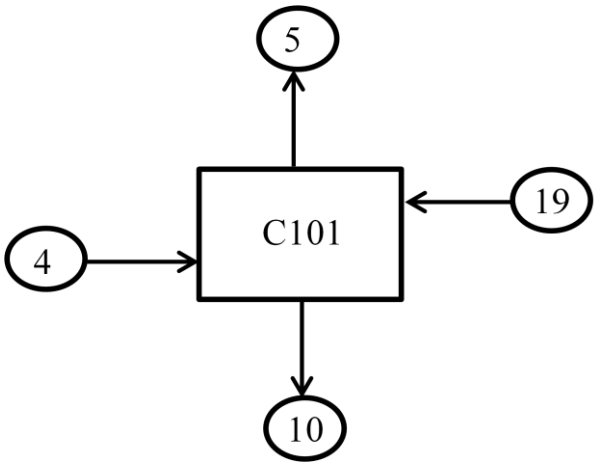

STREAM 4:

Table 10.4: Composition of stream 4

Input	MW	Mole/hr	Mass(kg/hr)
Ethylene	28.00	1369655.00	38350.34
Ethylene Oxide	44.00	500194.99	22008.58
CO_2	44.00	176623.58	7771.44
Water	18.00	176098.50	3169.77

Oxygen	32.00	3399679.38	108789.74
Total		5622251.44	180089.87

STREAM 19:

Table 10.5: Composition of stream 19

Input	MW	Mole/hr	Mass(kg/hr)
Water	18.00	2343631.89	42185.37
MEG	62.00	5136.21	318.44
DEG	106.00	53.64	5.69
TEG	150.00	3.43	0.51
Total		2348825.17	42510.02

Table 10.6: Solubility of compounds in water at 45°C

Compound	Solubility in water in g/g at 45°C
Oxygen	0.0000287
CO_2	0.001379
Ethylene	0.00011

STREAM 10:

Table 10.7: Composition of stream 10

Output	MW	Mole/hr	Mass(kg/hr)
Water	18.00	2519730.39	45355.15

EO	44.00	475185.24	20908.15
Ethylene	28.00	178.18	4.99
Oxygen	32.00	40.68	1.30
CO_2	44.00	1421.47	62.54
MEG	62.00	5136.21	318.44
DEG	106.00	53.64	5.69
TEG	150.00	3.43	0.51
Total		3001749.24	66656.78

STREAM 5:

Table 10.8: Composition of stream 5

Output	**MW**	**Mole/hr**	**Mass(kg/hr)**
Ethylene	28.00	1369476.82	38345.35
Oxygen	32.00	3399638.70	108788.44
EO	44.00	25009.75	1100.43
CO_2	44.00	175202.11	7708.89
Total		4969327.37	289883.78

10.3 CO_2 Removal

CO_2 present in gaseous stream is removed from stream and clean stream is recycled to reactor. For absorption of CO_2 carbonate solution is used. CO_2 absorbed in this column is then desorbed in next column and then sent to atmosphere.

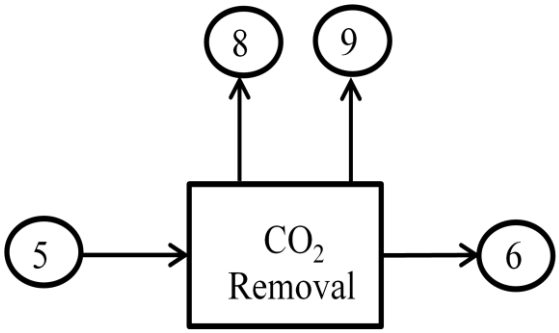

STREAM 5:

Table 10.9: Composition of stream 5

Input	MW	Mole/hr	Mass(kg/hr)
Ethylene	28.00	1369476.82	38345.35
Oxygen	32.00	3399638.70	108788.44
EO	44.00	25009.75	1100.43
CO_2	44.00	175202.11	7708.89
Total		4969327.37	289883.78

In this absorption process all Carbon dioxide is assumed to be removed from gaseous stream.

STREAM 6:

Table 10.10: Composition of stream 6

Output	MW	Mole/hr	Mass(kg/hr)
Ethylene	28.00	1369476.82	38345.35
Oxygen	32.00	3399638.70	108788.44
EO	44.00	1250.49	55.02
CO_2	44.00	525.61	23.13
Total		4770891.61	147211.94

STREAM 8:

Table 10.11: Composition of stream 8

Output	MW	Mole/hr	Mass(kg/hr)
EO	44.00	23759.26	1045.41

STREAM 9:

Table 10.12: Composition of stream 9

Output	MW	Mole/hr	Mass(kg/hr)
CO_2	44.00	174676.50	7685.77

10.4 EG Reactor(R102)

Aqueous stream containing water, EO and dissolved gases is mixed with recycled water and then is fed to hydration reactor. Water to EO ratio is maintained at 8:1.

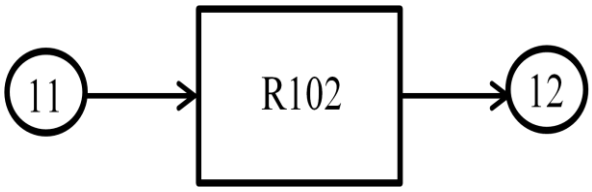

STREAM 11:

Table 10.13: Composition of stream 11

Input	MW	Mole/hr	Mass(kg/hr)
water	18.00	9292511.31	167265.20
EO	44.00	475185.24	20908.15
Ethylene	28.00	178.18	4.99

Oxygen	32.00	40.68	1.30
CO_2	44.00	1421.47	62.54
MEG	62.00	9680.76	600.21
DEG	106.00	96.89	10.27
TEG	150.00	6.19	0.93
Total		9779120.72	188853.60

In this reaction conversion is almost 99.9% but along with mono-ethylene glycol, di-ethylene glycol and tri-ethylene glycol are also formed. Selectivity of MEG is assumed to be 85%, that of DEG is assumed to be 13%, TEG is assumed to be 2%.

STREAM 12:

Table 10.14: Composition of stream 12

Output	**MW**	**Mole/hr**	**Mass(kg/hr)**
MEG	62.00	413184.30	25617.43
DEG	106.00	30953.04	3281.02
TEG	150.00	3170.93	475.64
Water	18.00	8854986.88	159389.76
Ethylene	28.00	178.18	4.99
Oxygen	32.00	40.68	1.30
EO	44.00	475.19	20.91
CO_2	44.00	1421.47	62.54
Total		9304410.67	188853.60

Makeup water is around 43317 kg/hr

10.5 Flasher and Evaporator

Gases dissolved in liquid stream are removed using flasher. Pressure maintained in flasher is about 2bar. All dissolved gases are assumed to be removed in this flasher.

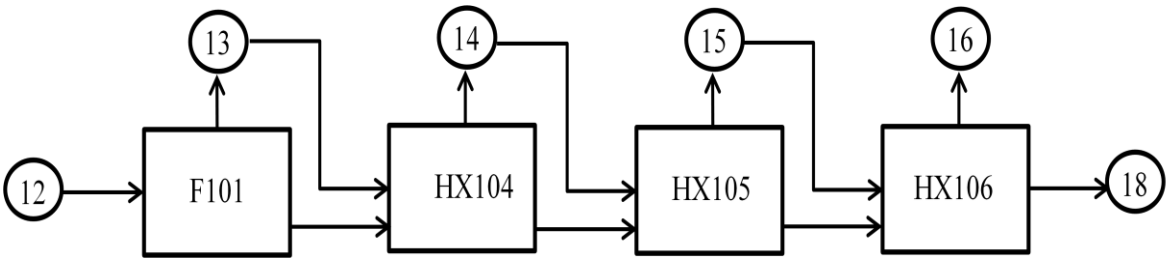

Input of flasher is same as output of hydration reactor.

STREAM 12:

Table 10.15: Composition of stream 12

	MW	Mole/hr	Mass(kg/hr)
MEG	62.00	413184.30	25617.43
DEG	106.00	30953.04	3281.02
TEG	150.00	3170.93	475.64
Water	18.00	8854986.88	159389.76
Ethylene	28.00	178.18	4.99
Oxygen	32.00	40.68	1.30
EO	44.00	475.19	20.91
CO_2	44.00	1421.47	62.54
Total		9304410.67	188853.60

STREAM 13, 14, 15:

Table 10.16: Composition of stream 13, 14, 15

	Stream 13		Stream 14		Stream 15	
	Mole/hr	**kg/hr**	**Mole/hr**	**kg/hr**	**Mole/hr**	**kg/hr**
MEG	2271.476	140.8315	2223.051	137.8291	2318.714	143.7602
DEG	26.74178	2.834628	24.84836	2.633926	23.4061	2.481047
TEG	5.076889	0.761533	0.4325	0.064875	0.373583	0.056037
Water	1619933	29158.79	1527855	27501.39	1522738	27409.28
Ethylene	178.18	4.99	0	0	0	0
Oxygen	40.68	1.30	0	0	0	0
EO	475.19	20.91	0	0	0	0
CO_2	1421.47	62.54	0	0	0	0
Total	1624351.5	29392.9	1530103	27641.91	1525080	27555.58

STREAM 16, 18:

Table 10.17: Composition of stream 16, 18

	Stream 16		Stream 18	
	Mole/hr	**kg/hr**	**Mole/hr**	**kg/hr**
MEG	2463.612	152.7439	403907.45	25042.26
DEG	21.89385	2.320749	30856.15	3270.75
TEG	0.310124	0.046519	3164.73	474.71

Water	1541002	27738.04	2643459.34	47582.27
Total	1543488	27893.15	3081387.68	76369.99

10.6 Distillation columns

Three distillation columns are used to get 99.7% pure MEG. In first column water content is removed from system. In second distillation column 99.7% pure MEG is obtained at the top of column while rest is sent to third distillation column. 99% pure DEG is obtained at top of third distillation column. While 99% pure TEG is obtained at bottom of third distillation column.

First column is operated at normal atmospheric pressure while rest two are operated at vacuum conditions.

10.6.1 Distillation column (D101)

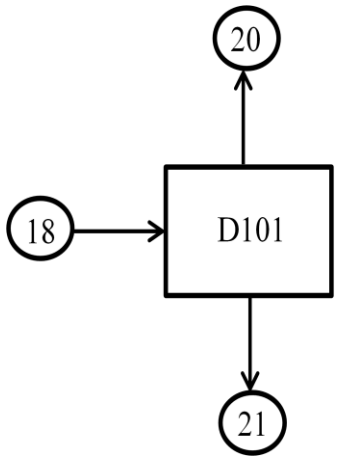

Table 10.18: Mass balance of D101

	Feed Stream 18		**Top Stream 20**		**Bottom Stream 21**	
	Mole/hr	**kg/hr**	**Mole/hr**	**kg/hr**	**Mole/hr**	**kg/hr**
MEG	403907.45	25042.26	403.91	25.04	403503.54	25017.22

DEG	30856.15	3270.75	0	0	30856.15	3270.75
TEG	3164.73	474.71	0	0	3164.73	474.71
Water	2643459.34	47582.27	2643194.99	47577.51	264.35	4.43
Total	3081387.68	76369.99	2643598.90	47602.55	437788.78	28767.44

10.6.2 Vacuum distillation column (D102)

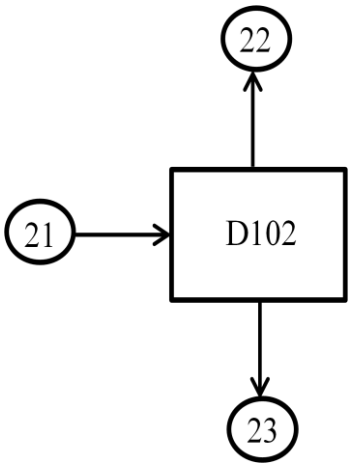

Table 10.19: Mass balance of D102

	Feed Stream 21		**Top Stream 22**		**Bottom Stream 23**	
	Mole/hr	**kg/hr**	**Mole/hr**	**kg/hr**	**Mole/hr**	**kg/hr**
MEG	403503.54	25017.22	403100.04	24992.20	403.50	25.02
DEG	30856.15	3270.75	30.86	3.27	30825.30	3267.48
TEG	3164.73	474.71	0	0	3164.73	474.71
Water	264.35	4.43	264.35	4.43	0	0
Total	437788.78	28767.44	403395.24	25000	34393.53	3767.21

10.6.3 Vacuum distillation column (D103)

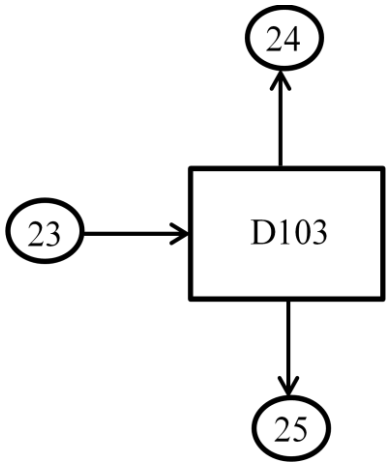

Table 10.20: Mass balance of D103

	Feed Stream 23		**Top Stream 24**		**Bottom Stream 25**	
	Mole/hr	**kg/hr**	**Mole/hr**	**kg/hr**	**Mole/hr**	**kg/hr**
MEG	403.50	25.02	403.50	25.02	0	0
DEG	30825.30	3267.48	30794.47	3264.21	30.83	3.27
TEG	3164.73	474.71	31.65	4.75	3133.09	469.96
Total	34393.53	3767.21	31229.62	3289.23	3163.91	473.23

11. ENERGY BALANCE

11.1 EO reactor R101 energy balance:

Moles of EO formed = 498945.7 moles/hr

Moles of CO_2 formed = 176098 mole/hr

Total moles of ethylene reacted = 586995 moles/hr

Heat evolved in EO formation = 106.8kJ/mol

Heat evolved in CO_2 formation = 1323kJ/mol

Total energy evolved = 45.26 MW

11.2 EG reactor R102 energy balance:

Moles of total EO reacted = 474710.05 moles/hr

Moles of MEG formed = 403503.54 moles/hr,

So Moles of EO reacted to form MEG = 403503.54 moles/hr

Moles of DEG formed = 30856.15 moles/hr,

So Moles of EO reacted to form DEG = 61712.31 mole/hr

Moles of TEG formed = 3164.73 moles/hr,

So Moles of EO reacted to form TEG = 9494.2 moles/hr

Enthalpy of MEG reaction = 90.8 KJ/mol

Enthalpy of DEG reaction = 97.02 KJ/mol

Enthalpy of TEG reaction = 104.5 = KJ/mol

Total heat evolved = 12.22 MW

11.3 Heat exchanger energy balance:

Table 11.1: Heat duty of heat exchangers

Heat exchanger	Process fluid	Flow rate (kg/hr)	Heat duty (MW)
HX101	R102 feed	52.45	15.05
HX102	R102 feed	52.45	6.45
HX103	HX104 output	8.13	0.72
HX104	F101 liquid output	44.29	17.41
HX105	HX104 liquid output	36.6	17.43
HX106	HX105 liquid output	28.96	17.41
HX107	HX106 vapours	7.7	18
HX108	C101 water feed	11.8	2.66
HX109	D101 feed	21.16	1.32
HX110	Bottom of D101	5.33	13.54
HX111	Bottom of D101	2.66	4.52
HX112	Vapours of D101	13.22	10.7
HX113	D102 feed	7.99	1.4
HX114	Bottom of D102	1.05	6.32
HX115	Vapours of D102	6.94	9.27
HX116	D103 feed	1.04	0.045
HX117	Bottom of D103	0.13	0.69
HX118	Vapours of D103	0.91	0.93
HX119	C102 Carbonate feed	29.55	0.69
HX120	C102 input	29.5	0.92
HX121	C102 bottom	31.6	0.81

HX122	C101 Product	18.5	4.17
HX123	MEG	6.94	1.49
HX124	DEG	0.91	0.214
HX125	TEG	0.13	0.04
HX126	Makeup Water	12.13	3.54

12. PROCESS DESIGN OF R102

EG reactor converts EO and water to EG.

From kinetics of reaction time required for 99.9% conversion of EO comes out to be 31s.

This reaction is a liquid state reaction with 30bar pressure and 2000C temperature. There is no catalyst used in this reactor. As Water:EO molar ratio is almost 20, volumetric flowrate in reactor is 0.069 m3/s. (Westerterp & Ptasinski, 1984)

Properties of liquid in reactor:

Table 12.1: Properties of reactants in R102

Properties	Value
Tint	473K
Toutt	473K
Cpt	4480J/kgK
Kt	0.68W/mK
µt	0.00063 Pas
Pt	770kg/m^3
Flow rate Ft	0.068 m^3
Time	31 s

Along with MEG some amount of DEG and TEG is also formed. Depending upon the moles of each compound formed, total heat evolved in reactor is calculated. These calculations are already presented in energy balance calculation.

So, Q = 12.21 MW

Reactor used in this condition needs to be PFR. As we need to remove very high amount of heat reactor selected here is multi tubular reactor.

Volume of reactor can be calculated as,

V=flowrate X time

= 2.15 m^3

If

Dt = tube diameter

Nt = number of tubes

L = length of tubes

$$V = \frac{\pi}{4} * D_t^2 * L * N_t$$

This is one equation which will is a constraint on design.

According to heat transfer conditions, we will get area required for heat transfer which will put another constraint on selection of Nt and Lt

Design Algorithm:

1. Assuming the number of tubes and the tube diameter, the length of the tubes and the superficial mass velocity is calculated.
2. Thus the total heat transfer area required is calculated and based on the heat load the overall heat transfer coefficient (Ureq) that is required is calculated.
3. Selecting square tube pitch the shell side diameter and the shell side flow rate is calculated.
4. Reynolds number, Prandtl number are calculated and from correlations the shell side heat transfer coefficient is calculated.
5. Taking wall resistance, tube and shell side heat transfer overall heat transfer coefficient (Upred) is calculated.
6. For a satisfactory design, Upred > Ureq has to be satisfied. If not then the number of tubes and the tube diameter that are assumed earlier are changed accordingly until Upred>Ureq is satisfied.
7. Tube side and shell side Pressure Drop is calculated.

To remove heat from this reactor we need to use some cooling liquid on shell side. As temperature of reactor is high we can use dowtherm and then using this hot dowtherm we can heat some of the streams in plant

Properties of dowtherm used in shellside:

Table 12.2: Properties of dowtherm in R102

Properties	**Value**
Tins	323K
Touts	463K
Cps	2000J/kgK
Ks	0.15W/mK
μs	0.0002Pas
ρ_s	900kg/m^3
Flow rate Fs	0.048m^3/s

Dt = 25.4mm

Do = 32.5mm

T = 3.5mm

Number of tubes = Nt = 132

Length of tubes = $\frac{V}{Nt*\frac{\pi}{4}*D_t^2}$

Surface area available for heat transfer $Ah = \pi * Do * Nt * L$

= 385.8 m^2

Using heat transfer equation

$$Q = U * Ah * \Delta T_{lm}$$

Where,

$$\Delta T_{lm} = \frac{(T_{int} - T_{outs}) - (T_{outt} - T_{ins})}{\ln\left(\frac{T_{int} - T_{outs}}{T_{outt} - T_{ins}}\right)}$$

= 51.6

So,

From above equations U(pred) = 612.3 W/m^{2}K

- **Tube side heat transfer**

Total cross section area of tubes At = $Nt * \frac{\pi}{4} * D_t^2$

= 0.066 m^2

Flow rate in tube Ft = 0.069 m^3/s

So velocity in tubes = Ft/At = 1.03 m/s

Reynolds number in tube = $Re = \frac{\rho t * Dt * Vt}{\mu t}$

= 101360

Friction factor in tube is given by

$$ft = (1.58 * in(Ret) - 3.28)^{-2}$$

= 0.0044

Prandlt number in tube

$$Prt = \frac{Cpt * \mu t}{kt}$$

= 12.9

Nusselt number for turbulent region is given by

$$Nut = 0.023 * (Ret)^{\frac{2}{3}} * (\mathrm{Prt})^{\frac{1}{3}}$$

= 107.7

So hi can be calculated using

$$Nut = \frac{hi * Dt}{kt}$$

Therefore hi = 2884.4W/m^{2}K

- **Shell side heat transfer**

Tube layout selected is square.

Pt/Do=1.33

Therefore, Pt = 0.043 m

From this we can get equivalent diameter of shell side using

$$De = \frac{4(Pt^2 - \frac{\pi}{4}Do^2)}{\pi Do}$$

= 0.041m

As length of tube is around 32m, 2 pass configuration is selected for this reactor.

$$Ashell = \frac{Nt * CL * P_t^2}{CTP}$$

For 1-2pass configuration CTP = 0.9, also CL=1 (900 configuration)

So, Ashell = 0.822m^2

From Ashell we can calculate shell diameter using

$$Ashell = \frac{\pi}{4}Ds^2$$

Therefore, Ds = 1.023m

Now

We need to calculate flow area in shell side. Baffles are used to provide turbulence in shell side.

Baffle spacing is given by , B = 0.4Ds

= 0.41m

Number of baffles $Nb = \frac{L}{B} - 1$

= 38

Tube clearance is given by C = Pt – Do = 0.0107m

From all this factors we can get cross flow are in shell side

$$As = \frac{Ds * B * C}{Pt}$$

= 0.104m^2

Flow rate in shell Fs = 0.048m^3/s

Velocity in shell side Vs = Fs/As = 0.47 m/s

Reynolds number in shell

$$\text{Res} = \frac{\rho s * De * Vs}{\mu s}$$

= 85336.6

Prandlt number in shell

$$Prs = \frac{Cps * \mu s}{ks}$$

= 2.67

Friction factor in shell

$$fs = \exp(0.567 - 0.19 * \ln(Res))$$

fs = 0.188

Nusselt number in shell is given by

$$Nus = 0.36 * (Res)^{0.55} * (\text{Prs})^{\frac{1}{3}}$$

= 321.5

So ho can be calculated using

$$Nus = \frac{ho * De}{ks}$$

ho = 1185 W/m^{2}K

Therefore,

Overall heat transfer coefficient is given by,

$$U = \frac{1}{\frac{1}{ho} + \frac{Do * \ln\left(\frac{Do}{Dt}\right)}{2kw} + \frac{Do}{hi * Dt}}$$

Where,

Kw = thermal conductivity of tube material = 15 W/mK

U(cal) = 626.4 W/m^{2}K

As Ucal > Upred also difference is not much. We can select this reactor design.

- **Pressure drop calculation**

Pressure drop across tube is given by,

$$\Delta Pt = \left(\frac{4 * ft * P * L}{Dt} + 4 * P\right) * \left(\frac{\rho t * Vt^2}{2}\right)$$

= 22083Pa

Pressure drop across shell is given by,

$$\Delta Ps = \left(\frac{fs * Gs^2 * (Nb + 1) * Ds}{2 * \rho s * De}\right)$$

= 40932Pa

13. PROCESS DESIGN OF D101

The distillation column D1 separates the lower boiling water from higher boiling Monoethylene Glycol, Diethylene Glycol and Triethylene Glycol. The column is a atmospheric distillation column. Feed to this distillation column comes from multi effect evaporator.

The following table gives the abbreviation used.

Table 13.1: Abbreviation of compounds

Compound	Abbreviation
Water	W
Mono-Ethylene Glycol	MEG
Di-Ethylene Glycol	DEG
Tri-Ethylene Glycol	TEG

The material balance compositions of feed, distillate and bottoms are given in the following table.

Table 13.2: Mass balance of D101

	Molar flow rates(mol/hr)			Mole fractions		
Compound	**Feed**	**Distillate**	**Bottom**	**Feed**	**Distillate**	**Bottom**
MEG	403907	403.907	403504	0.1315	0.00015	0.92169
DEG	30856.2	0.0	30856.2	0.01005	0.0	0.07048
TEG	3164.73	0.0	3164.73	0.00103	0.0	0.00723
W	2633675	2633412	263.368	0.85743	0.9998	0.0006

The vapour pressure of the above compounds is given by Antoine equation. Constants for these Antoine equations are given below.

Table 13.3: Antoine constants for liquid compounds

Compound	A	B	C
MEG	8.2121	2161.9	208.43
DEG	7.7007	2019.25	173.66
TEG	7.6302	2156.45	165.92
W	8.1402	1810.9	244.48

$$log_{10}VP = A - \frac{B}{C + T}$$

Where, Vapour Pressure VP is in (mm Hg) and temperature T is in ^{0}C.

Now we need to calculate bubble point of bottom and feed stream while dew point of top stream.

So to calculate bubble point we can use:

$$\sum x_i P_i^{sat} = P$$

Similarly Dew point of mixture can be calculated as:

$$\sum \frac{P y_i}{P_i^{sat}} = 1$$

Bubble point of feed mixture = 104^{0}C

Bubble point of bottom mixture = 199^{0}C

Dew point of distillate vapours = 99.8^{0}C

As this is a multi component distillation we need to first decide which components we are separating first. Out of those two components the having lower vapour pressure at given temperature will be high key component (HKC) while the other one will be light key component (LKC). Rest components are be non key components.

In this distillation we are removing water from glycol mixture and MEG is the glycol with highest vapour pressure amongst MEG, DEG, TEG.

Light Key Component = Water

High Key Component = MEG

We then need to calculate relative volatility of all compounds with respect to current high key component.

$$k = \frac{Vapour\ Pressure}{Total\ Pressure}$$

$$Relative\ voltility = \ \alpha = \frac{k\ of\ any\ component}{k\ of\ HKC}$$

- Feed

Table 13.4: Relative volatility of feed compounds

Compound	**VP(Pa)**	**K**	**Rel. Volatility (α)**
W	117094.1	1.15	44.78
MEG	2614.40	0.025802	1
DEG	357.45	0.003528	0.13
TEG	58.32	0.000576	0.02

- Top

Table 13.5: Relative volatility of top compounds

Compound	VP(Pa)	K	Rel. Volatility (α)
W	101904.7	1.00	47.92
MEG	2126.34	0.020985	1
DEG	279.84	0.002762	0.131
TEG	44.22	0.000437	0.02

- Bottom

Table 13.6: Relative volatility of bottom compounds

Compound	VP(Pa)	K	Rel. Volatility (α)
W	1519557.27	14.99	14.15
MEG	107353.3	1.059495	1
DEG	25534.36	0.252005	0.23
TEG	7010.12	0.069185	0.06

The value of relative volatility for given component is obtained from geometric mean of values at these three positions.

$$\alpha_{avg} = \sqrt{\alpha_F \alpha_D \alpha_B}$$

Table 13.7: Average relative volatility of compounds

Compound	Average relative volatility
W	31.20

MEG	1
DEG	0.16
TEG	0.03

$$\alpha_{avg(W,MEG)} = 31.2$$

Minimum number of stages at total reflux

The minimum number of plates (N_{min}) at infinite reflux ratio is given by following equation:

$$N_{min} = \frac{\ln\left(\frac{\frac{X_{D,LK}}{X_{B,LK}}}{\frac{X_{D,HK}}{X_{B,HK}}}\right)}{\ln\left(\alpha_{LK,HK}\right)} - 1$$

Substituting the values, we get,

N_{min} = 3.01

Calculation on minimum reflux ratio

$$1 - q = \sum \frac{\alpha_i x_{f,i}}{\alpha_i - \phi}$$

The value of φ is to be estimated by trial and error, such that it satisfies the above equation.

Feed entering in distillation column is assumed to be saturated liquid. So value of q is equal to 1. ((Hassan et. al, 2013)

The equation was solved using goal seek, to get the value of φ = 1.148

The calculations are shown in the table below:

Table 13.8: Calculation on minimum reflux ratio

Compound	**Rel. volatility(α)**	$\mathbf{x_F}$	$\boldsymbol{\frac{\alpha_i x_{f,i}}{\alpha_i - \phi}}$
W	31.20	0.85	0.89

MEG	1	0.13	-0.88
DEG	0.162	0.01	-0.0016
TEG	0.031	0.001	-0.000029
		Total	0

The minimum reflux ratio is now found as follows:

$$1 + R_{Dm} = \sum \frac{\alpha_i x_{D,i}}{\alpha_i - \phi}$$

R_{Dm} = 0.037

Determination of optimum reflux ratio

The Eduljee correlation is used to find the optimum reflux ratio:

$$Y = 0.75(1 - X^{0.5668})$$

$$Y = \frac{N - N_{min}}{N + 1}$$

$$X = \frac{R - R_{Dm}}{R + 1}$$

Table 13.9: Calculation of number of stages

R/R_m	**R**	**X**	**Y**	**N**
1.100	0.041	0.004	0.719	13.304
1.200	0.044	0.007	0.705	12.593
1.300	0.048	0.011	0.693	12.080
1.400	0.052	0.014	0.683	11.669
1.500	0.056	0.018	0.674	11.324
1.600	**0.059**	**0.021**	**0.666**	**11.025**

1.700	0.063	0.024	0.659	10.762
1.800	0.067	0.028	0.652	10.526
1.900	0.070	0.031	0.645	10.312
2.000	0.074	0.034	0.639	10.117

Actually, the optimum reflux ratio is $2R_m$ since beyond this, the number of stages do not reduce substantially with increase in reflux ratio.

So number of stages in distillation column = 12

- **Determination of column diameter**

Flooding plot given by Eckert, modified by Strigel, is used to estimate the column diameter.

$$Capacity\ parameter = C_s F_P^{0.5} \nu^{0.05}$$

$$C_s = U_s \sqrt{\frac{\rho_G}{\rho_L - \rho_G}}$$

F_P =packing factor in feet^{-1}

ϑ = Kinematic viscosity in centistokes

U_s = superficial gas velocity in feet/sec

Flow parameter is given by

$$F = \frac{L}{G}\sqrt{\frac{\rho_G}{\rho_L}}$$

Flooding pressure drop is given by

$$\Delta P_{flood}\left(\frac{inch\ water}{foot}\right) = 0.12(F_P)^{0.7}$$

While calculating area of cross section we assume that column operates at 60% flooding condition.

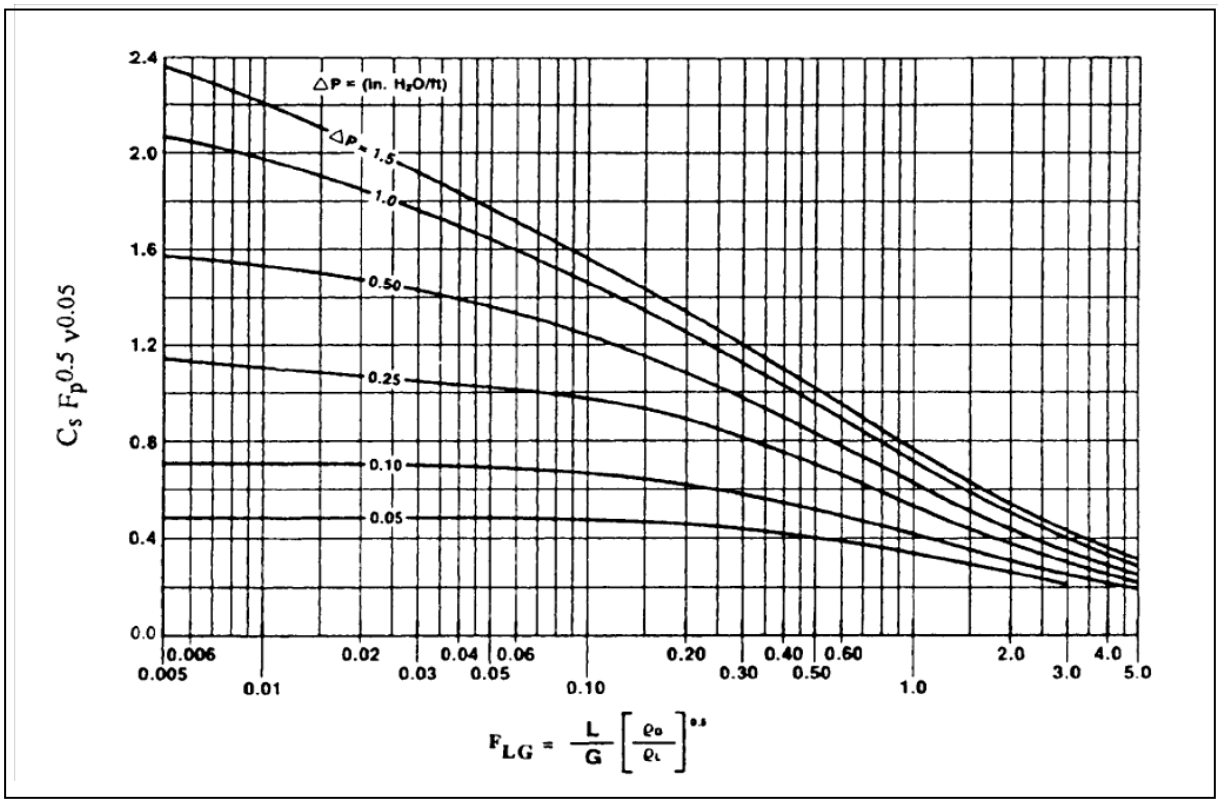

Figure 13.1: Eckert's plot

<u>Top section of the column</u>

Table 13.10: Calculation for top diameter of D101

Quantity	**Value**
D(kg/s)	13.17 kg/s
L(kg/s) = RD	0.77 kg/s
V(kg/s) = (R+1)D	13.954 kg/s
ρ_L	985 kg/m^3
ρ_v	0.6 kg/m^3
Flow parameter F	0.0014

Fp	12
ΔP_{flood}	0.68 inch water/foot
ν	0.4 cp
Capacity factor (from graph)	1.6
Cs	0.483
Us	10.59 ft/s
G	3.58 kg/m^{2}s
Area of cross section = V/(G*0.6)	4.42 m^2
Diameter	2.37 m

Bottom section of column

Since feed is saturated liquid, it will come to bottom section

So, L = feed + liquid from top

Vapour at bottom V = L – (bottom product)

Table 13.11: Calculation for bottom diameter of D101

Quantity	**Value**
L(kg/s)	21.9kg/s
V(kg/s)	13.89 kg/s
ρ_L	985 kg/m^3
ρ_v	1.68 kg/m^3
Flow parameter F	0.0652
Fp	12

ΔP_{flood}	0.68 inch water/foot
ν	0.42 cp
Capacity factor (from graph)	1.5
Cs	0.453
Us	10.97 ft/s
G	5.62 kg/m^{2}s
Area of cross section = V/(G*0.6)	6.50 m
Diameter	2.87 m

Top D = 2.86m while bottom D=2.87m

So diameter of column selected D=2.9m

$$HETP = 0.5D^{0.3}$$

So HETP = 0.68

Calculation of height of column:

Number of stages = 12

Mellapak plus 252Y structured packing (Sulzer) is chosen.

- **Packing characteristics are as follows**
  (http://www.sulzer.com)

Surface area = 250 m^2/m^3

Percent void = 98%

Packing factor = F_P = 12

HETP = 0.3-0.7

HETP from calculation is in range of manufacturer's HETP

So theoretical height of column = (No. of stages) X (HETP) = 8.25

Actual height of column = 1.2 X 8.25 = 9.9

So height of column selected = 10 m

- **Design of liquid Distributor**

Packing height = 8.25 m

Number of packing sections = 3 with 2.75 m packed height

Type of Liquid Distributor = spider type

For each 194 cm^2 one distribution point is required (Rule of thumb),

Number of holes required in pipe type distributor is given by

$$n_i = \left(\frac{\pi * D_i^2}{4 * 0.0194}\right)$$

= 340

L from top = 0.77 kg/s

Density = 985 kg/m^3

So L = 0.00078 m^3/s

Assuming velocity of liquid in pipe = 1 m/s

Inside diameter of pipe = $\sqrt{\frac{0.00078*4}{1*\pi}}$ = 0.0315 m = 32 mm

Velocity through the hole is typically 1.5 times velocity through pipe = 1.5 m/s

Equating flow rates we get,

$$1.5 * 340 * \frac{\pi}{4} * d_h^2 = 0.00078$$

d_h = 1.4 mm

- **Design of condenser**

Heat load of condenser (Q_c) = $(R + 1) * (\sum n_i \lambda_i)$

Average heat of vaporisation for compounds is:

Table 13.12: Heat of vaporization of compounds

Compound	**Heat of vaporisation**
Water	41KJ/mol
MEG	63 KJ/mol
DEG	75 KJ/mol
TEG	86 KJ/mol

In this case Q_c = 10.7 MW

Cooling water is used to condense these vapours

Temperature of condenser = 99.8^0C

Table 13.13: Condenser design of D101

Properties	**Value**
Tin	27^0C
Tout	34^0C
T condenser	99.8^0C
ΔT_{lm}	69.2^0C
U (assumed)	900W/m^2K

A = $\frac{Q_c}{U*\Delta T_{lm}}$	172.63 m^2
Di (tube inner diameter)	0.035 m
Do (tube outer diameter)	0.042 m
t (thickness)	0.0035 m
N (number of tubes)	300
L (length of tubes)	4.4 m
PT/do (pitch to diameter ratio)	1.33
PT (pitch)	0.046
Type of tube layout	Square layout
De (equivalent diameter) = $\frac{4\left\{P_T^2-\frac{\pi}{4}D_O^2\right\}}{\pi D_o}$	0.023 m
P (number of passes)	1
Ashell (area of shell)	0.724 m^2
Ds (diameter of shell)	0.96 m

- **Design of Reboiler**

Temperature of reboiler = 197^0C

High pressure steam is used to provide heat in reboiler.

Reboiler duty is also calculated in same manner.

So Q_r = 13.54MW

1/3rd of this heat is given by dowtherm while remaining 2/3rd of the heat is given by steam at 20 bar.

Design of dowtherm reboiler

Table 13.14: Dowtherm reboiler design of D101

Properties	**Values**
Tin Dow	214^0C
m Dow	238.2 kg/s
Cp of Dow	2000kJ/kgK
Tout Dow	204.5^0C
T reboiler	199^0C
ΔT_{lm}	9.5^0C
U (assumed)	900 W/m^{2}K
A = $\frac{Q_c}{U*\Delta T_{lm}}$	528.8 m^2
Di (tube inner diameter)	0.035 m
Do (tube outer diameter)	0.042 m
t (thickness)	0.0035 m
N (number of tubes)	300
L (length of tubes)	13.3m
PT/do (pitch to diameter ratio)	1.33
PT (pitch)	0.046 m
Type of tube layout	Square layout
De (equivalent diameter) = $\frac{4\left\{P_T^2-\frac{\pi}{4}D_o^2\right\}}{\pi D_o}$	0.023 m
P (number of passes)	3

Ashell (area of shell)	2.17 m^2
Ds (diameter of shell)	1.66 m

Steam reboiler Design

Table 13.15: Steam reboiler design of D101

Properties	**Values**
Tsteam	212^0C
m steam	4.7kg/s
Heat of vaporization	1888kJ/kg
T reboiler	199^0C
ΔT_{lm}	13^0C
U (assumed)	1500 W/m^2K
A = $\frac{Q_c}{U*\Delta T_{lm}}$	694.6 m^2
Di (tube inner diameter)	0.035 m
Do (tube outer diameter)	0.042 m
t (thickness)	0.0035 m
N (number of tubes)	300
L (length of tubes)	17.5m
PT/do (pitch to diameter ratio)	1.33
PT (pitch)	0.046 m
Type of tube layout	Square layout

De (equivalent diameter) = $\frac{4\left\{P_T^2-\frac{\pi}{4}D_o^2\right\}}{\pi D_o}$	0.023 m
P (number of passes)	4
Ashell (area of shell)	2.9 m^2
Ds (diameter of shell)	1.92 m

14. SIZING OF EQUIPMENT

14.1 Sizing of Distillation columns

Table 14.1: Sizing of Distillation columns

Parameters	D102	D103
P(mm Hg)	50	15
Tfeed(^oC)	124.5	136.2
Ttop(^oC)	123.5	135.7
Tbot(^oC)	156	167.5
High key component	DEG	TEG
Light key component	MEG	DEG
α_{avg}	5.78	4.6
Nm	4.23	4.9
Φ	1.06	1.07
R_m	0.21	0.26
R/R_m	1.5	1.6
R	0.31	0.429
N	12	12
Packing H(m)	8.5	6.77
H(m)	10.5	8.5
D(m)	3.2	1.5

14.2 Sizing of EO reactor R101

(Sundmacher et. al, 2011)

Table 14.2: Sizing of R101

Parameter	Value
Flow rate (m^3/s)	4.75
Residence time (s)	8
Reactor T(k)	523
Reactor P(bar)	15
Void Volume (m^3)	38
Catalyst	Silver
Density of Catalyst(kg/m^3)	779.2
Porosity	0.4
Catalyst mass (kg)	44414.4
Number of reactors in parallel	4
Volume of each reactor(m^3)	23.75
Heat duty per rector (MW)	11.16
Tube inner diameter di (m)	0.04
Tube outer diameter do (m)	0.047
Nt	1700
L(m)	11.2
Cooling media	Dowtherm
Dowtherm Tin(^oC)	150

Dowtherm Tout(^oC)	245
Mass flowrate of dowtherm(kg/s)	59.56

14.3 Sizing of Condenser and Reboiler of Distillation columns

(Hewitt et. al, 1994)

Table 14.3: Sizing of condensers and reboilers of distillation column

Parameter	**HX115**	**HX118**	**HX114**	**HX117**
Type	Condenser	Condenser	Reboiler	Reboiler
Process Fluid	Vapours of D102	Vapours of D103	Bottom of D102	Bottom of D103
Cooling/Heating Fluid	Cooling water	Cooling water	Dowtherm	Dowtherm
Process Fluid T(^oC)	123.5	135.7	156	167.5
CW Tin(^oC)	27	27	-	-
CW Tout(^oC)	34	34	-	-
Dowtherm Tin(^oC)	-	-	203	204.5
Dowtherm Tout(^oC)	-	-	189.7	203
LMTD	93.9	105.6	40.05	36.3
U(W/m^2K)	900	800	900	700
A(m^2)	109.8	10.97	175.5	27.43

Di(m)	0.035	0.0224	0.035	0.035
Do(m)	0.042	0.0266	0.042	0.042
Nt	250	100	250	250

14.4 Sizing of heat exchangers-1

(Hewitt et. al, 1994)

Table 14.4: Sizing of heat exchangers-1

Parameter	**HX101**	**HX102**	**HX122**	**HX126**	**HX109**
Purpose	Preheating of R102 feed	Preheating of R102 feed	C101 Product heating	Makeup water for R102 Heating	Preheating D101 feed
Heat Duty (MW)	15.05	6.45	4.17	3.54	1.32
Process Fluid	R102 feed	R102 feed	C101 Product	Makeup Water	D101 feed
Process Fluid Flow (kg/s)	52.45	52.45	18.5	12.13	21.16
Cooling/Heating Fluid	Dowtherm from R101	Dowtherm from R102	Dowtherm from D101 feed heater	Dowtherm from C101 o/p heater	Dowtherm from C103 reboiler
Cooling/Heating Fluid flow(kg/s)	238.2	43.61	238.2	238.2	238.2
Process Fluid Tin(^oC)	130	100	45	30	88

Process Fluid Tout(^oC)	200	130	100	100	104
Dowtherm Tin(^oC)	245	190	175.2	166.4	178
Dowtherm Tout(^oC)	213.4	116	166.4	159	175.2
LMTD	62.3	33.3	96.5	94.3	105.8
U(W/m^2K)	350	350	350	350	350
A(m^2)	691.1	553.4	123.6	107.5	41.58

14.5 Sizing of heat exchangers-2

(Hewitt et. al, 1994)

Table 14.5: Sizing of heat exchangers-2

Parameter	**HX103**	**HX108**	**HX113**	**HX116**	**HX119**
Purpose	Cooling	Cooling	Cooling	Cooling	Cooling
Heat Duty (MW)	0.72	2.66	1.4	0.045	0.69
Process Fluid	HX104 o/p	C101 water feed	D102 feed	D103 feed	C102 Carbonate feed
Process Fluid Flow (kg/s)	8.13	11.8	7.99	1.04	29.55
Cooling/Heating Fluid	CW	CW	CW	CW	CW

Cooling/Heating Fluid flow(kg/s)	24.58	91	48.8	1.55	33.08
Process Fluid Tin(^oC)	122	100	199	156	102
Process Fluid Tout(^oC)	100	45	124.5	136.2	96
CW Tin(^oC)	27	27	27	27	27
CWTout(^oC)	34	34	34	34	34
LMTD	80.5	36.9	128.3	115.5	69.5
U(W/m^2K)	300	300	300	300	300
A(m^2)	29.8	240.25	37.1	1.57	33.1

14.6 Sizing of heat exchangers-3

(Hewitt et. al, 1994)

Table 14.6: Sizing of heat exchangers-3

Parameter	**HX120**	**HX121**	**HX123**	**HX124**	**HX125**
Purpose	Heat exchange	Reboiler	Cooling	Cooling	Cooling
Heat Duty (MW)	0.92	0.81	1.49	0.214	0.04
Process Fluid	C102 input	C102 bottom	MEG	DEG	TEG
Process Fluid Flow (kg/s)	29.5	31.6	6.94	0.91	0.13

Cooling/Heating Fluid	C102 output	Dowtherm	CW	CW	CW
Cooling/Heating Fluid flow(kg/s)	31.6	238.25	50.9	7.32	1.37
Process Fluid Tin(^oC)	110	103	123.5	135.7	167.5
Process Fluid Tout(^oC)	102	110	40	40	40
Cooling/heating fluid Tin(^oC)	96	189	27	27	27
Cooling/heating fluid Tout(^oC)	103.4	178	34	34	34
LMTD	6.26	77.1	39.6	43.11	51.7
U(W/m^2K)	300	900	300	300	300
A(m^2)	490.5	80.8	125.7	16.6	2.6

14.7 Sizing of multi effect evaporator

Table 14.7: Sizing of multi-effect evaporator

Parameter	HX104	HX105	HX106
Pressure (bar)	1.5	1	0.6
T(^oC)	113	101.5	88

Steam Pressure (bar)	2	1.5	1
Steam T(^{o}C)	122	113	101.5
Heat Removed	17.44	17.8	18.23
ΔT	9	11.5	13.5
U	3000	2350	2000
A	645	645	645

14.8 Sizing of absorption columns

99.9% of EO in reactor outlet is assumed to be absorbed in water. For this quantity of water used is 1.1 times moles of EO. (Treybal, 1981)

Various thumb rules are used to size this absorption column.

Top pressure of column = 1.2 bar

Henry's constant for EO in water = 7.5 atm

Mole fraction of EO in inlet gas = y_b = 0.088

Mole fraction of EO in outlet gas = y_a = 0.005

Mole fraction of EO in inlet water = x_a = 0

Mole fraction of EO in outlet water = x_b = 0.165

$$y^* = \frac{P * x}{H}$$

So,

y_a^* = 0

y_b^* = 0.026

Number of stages is given by,

$$N = \frac{y_b - y_a}{\Delta y}$$

Where,

$$\Delta y = \frac{(y_b - y_b^*) - (y_a - y_a^*)}{ln\left(\frac{(y_b - y_b^*)}{(y_a - y_a^*)}\right)}$$

From these equations we get,

N = 18.05

As this one is packed absorption column,

HETP for selected packing = 0.4

So packing height = N*HETP

= 7.2

So actual height of column = 8.5m

For calculation of diameter of absorption column some of the thumb rules in absorption column are used.

Liquid to gas ratio about (L/G) 0.7 to 1.8 L/m^3
Liquid loading on usual packing 3 to 35 L/m^2 s and on structured packing 0.007 to 5
Molar ratio liquid to gas (Fl/Fg) 1.4 to 80
Superficial gas velocity (Vg) 1.4 to 2.2 m/s
With diameter of 2m
L/G = 1.6 L/m^3
Vg = 1.98
Liquid loading = 3.75
All are satisfying standard ranges so dimensions of column are
H = 8.5m and D = 2m

Similarly for CO_2 absorption H = 8m and D = 2.5m
And for CO_2 stripping H = 9m and D = 2.5m

14.9 Sizing of Compressor

While sizing compressors it is assumed that the process of compression is isentropic.

So we have,

$$\frac{T_{2s}}{T_1} = \left(\frac{P_2}{P_1}\right)^{1-\frac{1}{k}}$$

Where, k = polytropic index of gas

$$T_2 = T_1 + \frac{T_2 - T_1}{\eta}$$

Where, η = isentropic efficiency of compressor = 0.85

Actual mechanical work done by compressor is given by

$$W = \frac{k}{k-1} * zRT_1 \left[\left(\frac{P_2}{P_2}\right)^{1-\frac{1}{k}} - 1\right]$$

As desired temperatures at outlet of compressors are very high we can use two stage compressors with inter-stage cooling. Inlet temperature of second stage compressor is decided on the basis that final temperature required is 523K.(Wala, 1990)

Table 14.8: Sizing of compressors

	J101	**J102**	**J103**	**J104**
Fluid	Oxygen	Ethylene	Recycled gases	C102 inlet
Flowrate(mol/hr)	518471.8	588542.7	4764710	4967915
K	1.39	1.27	1.34	1.33
Number of Stages	2	2	2	2
Inlet pressure of 1st stage(bar)	1	1	4	1
Outlet pressure of 1st stage(bar)	4	4	8	2
Outlet pressure of 2nd stage(bar)	15	15	15	4

Inlet temperature of 1st stage(K)	298	298	374	318
Outlet temperature of 1st stage(K)	464	418	458	390
Inlet temperature of 2nd stage(K)	343	379	435	302
Outlet temperature of 2nd stage(K)	523	523	523	370
1st stage power (MW)	0.604	0.65	3.11	2.74
2nd stage power(MW)	0.65	0.78	3.26	2.62
Total Power(MW)	1.254	1.43	6.37	5.36
Compressor Power selected(hp)	1800	2000	9000	7500

14.10 Sizing of turbine

Gases from R101 are at higher pressure of 30bar and higher temperature of 250°C while next equipment which is C101 (EO absorber) is operating at 1 bar pressure and 45°C temperature. So we are depressurising this high pressure, high temperature gas using gas turbine.

Gas expansion is assumed to be isentropic process.(Wala, 1990)

$$\frac{T_{2s}}{T_1} = \left(\frac{P_2}{P_1}\right)^{1-\frac{1}{k}}$$

Where k = polytropic index of gas

$$T_2 = T_1 - \eta(T_1 - T_{2s})$$

Where, η = isentropic efficiency of expansion = 0.87

Actual mechanical work done is given by

$$W = \frac{k}{k-1} * zRT\left[\left(\frac{P_2}{P_2}\right)^{1-\frac{1}{k}} - 1\right]$$

Inlet P = 15 bar

Inlet T = 523K

Outlet P = 1.3 bar

Outlet T_{2s} = 285K

Outlet T_2 = 316K

Mechanical work obtained from turbine = 12.44 MW

Assuming 87% efficiency, electric power obtained is 10.82MW

14.11 Sizing of Pump

For sizing of pump efficiency is assumed to be 70%. Also head required for each pump is assumed on basis of height of pumping and output pressure.

$$P_1 + H_1\rho g + \frac{\rho V_1^2}{2} + W = P_2 + H_2\rho g + \frac{\rho V_2^2}{2} + \Delta P$$

Table 14.9: Sizing of pumps

PUMP	Q (m^3/hr)	Density (kg/m^3)	Head (m)	ΔP(N/m^2)	Power (hp)	Pump power (hp)
P1	106.29	630.00	20.00	123480	6.98	7.00
P2	236.07	800.00	325.00	2548000	319.96	320.00
P3	87.25	900.00	20.00	176400	8.19	9.00
P4	34.47	850.00	20.00	166600	3.06	4.00
P5	32.52	850.00	20.00	166600	2.88	3.00

P6	32.42	850.00	20.00	166600	2.87	3.00
P7	32.82	850.00	20.00	166600	2.91	3.00
P8	47.23	900.00	25.00	220500	5.54	6.00
P9	84.66	900.00	25.00	220500	9.93	10.00
P10	15.98	900.00	25.00	220500	1.87	2.00
P11	15.98	900.00	25.00	220500	1.87	2.00
P12	55.80	850.00	20.00	166600	4.94	5.00
P13	4.19	900.00	25.00	220500	0.49	0.50
P14	25.00	1000.00	20.00	196000	2.61	3.00
P15	0.43	1100.00	20.00	215600	0.05	0.50
P16	3.29	1000.00	20.00	196000	0.34	0.50
P17	126.74	900.00	25.00	220500	14.87	15.00
P18	118.20	900.00	25.00	220500	13.86	15.00
P19	43.67	1000.00	20.00	196000	4.55	5.00

14.12 Sizing of steam ejector

Selection of steam ejector depends on amount of vacuum generated and volume of equipment in which we are generating vacuum.(Wala, 1990)

For distillation column D103,

Volume of column = 18.03m^3

= 636.6ft^3

Pressure in column = 15 mm Hg

Leakage rate is given by,

$$m = K * V^{\frac{2}{3}}$$

Where,

K = constant depending on pressure

m is in lb/hr and V in ft^3

If vapours in equipment are other than steam then we need to multiply leakrate by factor fm

$$fm = 0.375*\ln(M/2)$$

where, M = molecular weight of vapours

So,

For pressure = 15 mm Hg

K = 0.08

m = 6.11lb/hr

fm = 1.54

m actual = m*fm = 9.37lb/hr

= 4.25 kg/hr

From graph steam, requirement is coming out to be 9 kg steam per kg leak for 2 stage ejector with 15 mmHg pressure.

Total steam requirement = 38.22 kg/hr

Steam used for vacuum is at 100psig pressure.

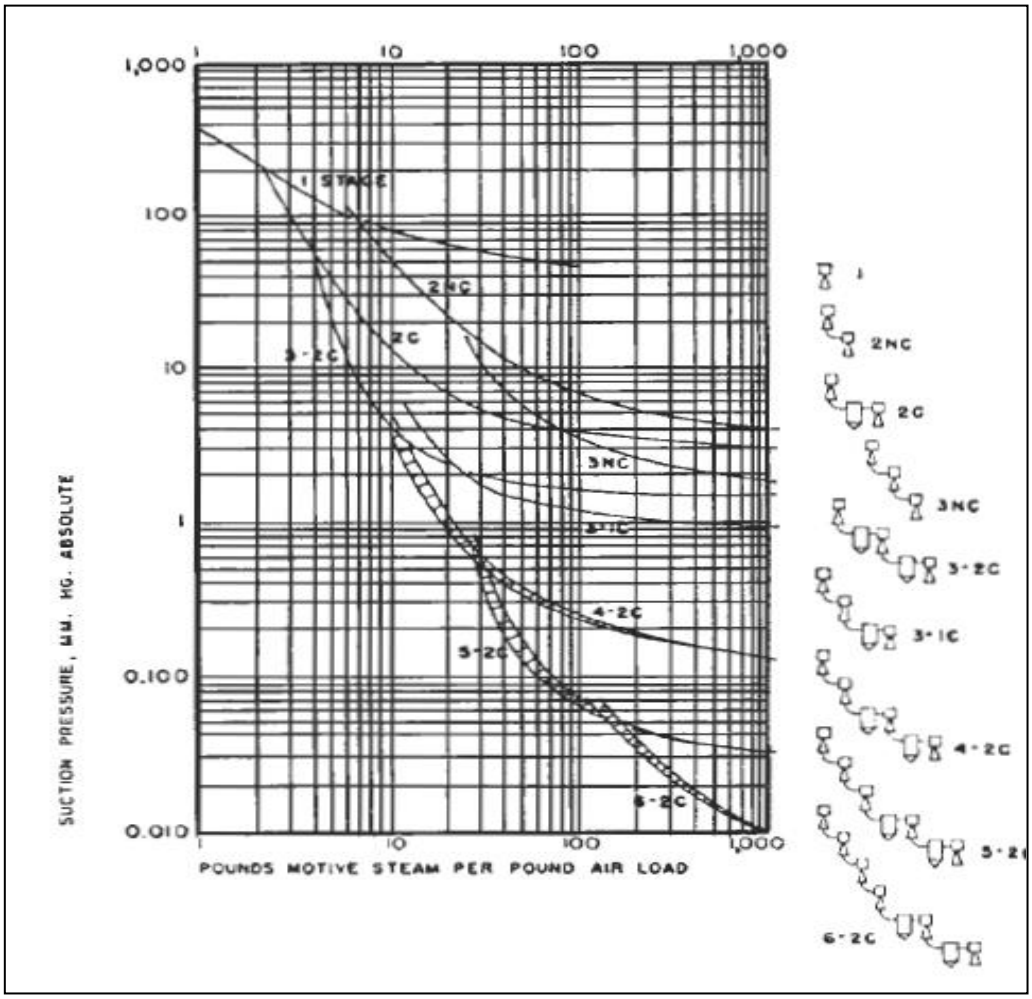

Figure 14.1: Steam ejector selection graph

Table 14.10: Sizing of ejectors

Equipment	Volume(ft^3)	P (mmHg)	K	Leak rate (kg/hr)	Steam requirement(kg/hr)
D102	3579.08	50.00	0.15	20.63	82.53
D103	636.63	15.00	0.08	4.25	38.22
HX106	1483.22	456.00	0.19	9.67	9.67

14.13 Sizing of Drum

Table 14.11: Sizing of drums

Parameters	V101	V102	V103	V104
Q(m^3/hr)	59.10	38.70	5.53	146.13
Holdup time (hr)	0.08	0.08	0.08	0.08
Holdup volume (m^3)	4.92	3.22	0.46	12.18
Drum volume (m^3)	9.85	6.45	0.92	24.35
L/D	2.50	2.50	2.50	2.50
D(m)	1.71	1.49	0.78	2.31
L(m)	4.28	3.72	1.94	5.79

14.14 Sizing of Flash Drum

Table 14.12: Sizing of flash drum

Parameters	F101	F102
Liquid Flow (m^3/hr)	167.66	126.74
Vapour Flow (m^3/hr)	26639.29	871.17
Residence Time (s)	4	10
Drum Volume (m^3)	29.77	2.77
L/D	3	3
D(m)	2.32	1.05
L(m)	6.98	3.16

15. MECHANICAL DESIGN

Distillation column D101 is selected for mechanical design. The procedure for design is as according to (Joshi & Mahajani, 2000). Specifications for the bubble column are:

Internal diameter of column (D_i) = 2.9 m

Design Height of column = 10 m

Design Pressure = 500000 Pa (This is the minimum design pressure for internal pressure columns)

Permissible Stress of SS304 = 115000000 Pa

15.1 Minimum Shell Thickness

The minimum shell thickness will be present at the top of the column and will be given by,

$$t = \frac{pD_i}{2fJ - P} + c$$

Where,

P – Design Pressure

D_i – Internal Diameter of Column

f- Permissible stress

J – Joint Efficiency

c – Corrosion allowance

$$t = 6.4mm + c$$

Considering a corrosion allowance of 3.6 mm,

$$t_s = 10 \text{ mm}$$

15.2 Head Thickness

A torispherical head is chosen for the column.

Crown Radius of head (Rc) = 1000mm

Radius of head (R_1) = 6% of Rc = 60mm

Stress Intensification Factor (W) = $0.25\left(3+\sqrt{\frac{R_c}{R_1}}\right)$ = 1.77

Hence the head thickness is given by,

$$t_h = \frac{PR_CW}{2fJ}$$

$$t_h = 5.8\,mm$$

Since the head is directly connected to the shell both the shell and the head need to have the same thickness,

t_h = 10 mm

15.3 Variation of shell thickness with height

The bubble column being tall tends to add more stress on the lower part of the column. It is therefore necessary to check for the integrity of the structure with the same shell thickness as determined above. The procedure involves addition of a number of stresses on the column and then finding out a permissible height above below which the thickness of the plate needs to be increased.

Consider a distance of 10m from the top,

1. Axial Stress due to pressure

$$f_{ap} = \frac{PDi}{4(t_s - c)} = 4.5 \times 10^7 Pa$$

2. Stresses due to dead load

$$f_{dx} = \frac{Weight\ of\ shell\ till\ H}{Cross\ Section\ of\ Shell}$$

Outer diameter of shell (D_o) = D_i + $2t_s$ = 2920 mm

Mean diameter of shell (D_m) = $\frac{(D_i+D_o)}{2}$ = 2910 mm

$$f_{dx} = \frac{\left(\frac{\pi}{4}\right)(D_o^2 - D_i^2)\rho H g}{\pi D_m (t_s - c)}$$

$$f_{dx} = 7.84 \times 10^5 Pa$$

3. Compressive stress because of insulation

   Density of insulation = 120 kg/m^3 (ρ_{ins})

   Thickness of insulation = 100 mm (t_{ins})

   ∴Diameter of insulation = 2 ×t_{ins} + D_o = 3120 mm

$$f_{dx_{ins}} = \frac{\pi D_{ins} t_{ins} \rho_{ins} \times g \times H}{\pi D_m (t_s - c)}$$

   Where, g – acceleration due to gravity = 9.81 m^2/s

$$f_{dx} = 1.61 \times 10^4 Pa$$

4. Compressive stress due to liquid in the column till height of 10m

   Density of liquid phosphorus = 2000 kg/m^3 (ρ_l)

$$f_{liq} = \frac{\left(\frac{\pi}{4}\right) D_i^2 \times H \times \rho_l \times g}{\pi D_m (t_s - c)}$$

$$f_{liq} = 3.4 \times 10^6 Pa$$

5. Stress due to wind load at 10m

$$f_w = \frac{1.4 M_w \times 10^2}{\pi D_o (t_s - c)}$$

   Where P_w = wind pressure. Generally,

$$P_w = 1300\ Pa$$

$$f_{wind} = 2.48 \times 10^6 Pa$$

6. Stress due to attachments, ladders etc.

   Weight of head on the shell = 600 kg

$$f_{attach} = \frac{(W + 140H)g}{\pi D_m (t_s - c)}$$

$$f_{attach} = 5.45 \times 10^5 Pa$$

The load on the shell is considered completely symmetric causing no eccentric stresses.

Total Stress on the shell = $\Sigma f_i == 5.25 \times 10^7$Pa

The total allowable stress of the shell = 11.5 ×10^7 Pa

The assumed value of 10m height can be greater, the above equatiosn are solved so as to get the total applied stress = Total permissible stress

H = 44.73m

15.4 Skirt for Column

Diameter of vessel = 2920 mm

Height of skirt = 2 m

Diameter of skirt = 2920 mm

Height of vessel = 10 m

Weight of column = 28000 kg

Assuming a skirt thickness (t_{sk}) = 50 mm

1. Stress due to dead weight

$$f_d = \frac{Wg}{\pi \times 637 \times 50 \times 10^{-3}}$$
$$f_d = 6.13 \times 10^5 Pa$$

2. Stress due to wind load

   Total height of column = 10000+2000 = 12000 mm

$$M_w = f_{lw}\left(\frac{H}{2}\right) \; for \; H < 20 \; m$$

$$f_{lw} = kPHD_o$$

Where, k – Coefficient depending on shape of vessel = 0.7 for cylindrical vessels.

H – Height of column

$$f_{lw} = 1.22 \times 10^7$$

$$M_w = 7.35 \times 10^7 Nm$$

$$f_{wind} = \frac{4M_w}{\pi D_o^2 \times t_{sk}}$$

$$f_{wind} = 2.19 \times 10^8 Pa$$

Maximum Tensile stress = f_{wind} -f_d = 2.19 ×10^8 Pa

The maximum permissible stress for SS304 is 1.150 ×10^8 Pa, hence a thicker skirt is required.

Solving for Maximum Tensile Stress = Permissible stress,

t_{sk} = 95 mm

The maximum compressible stress = $\left(\frac{1}{3}\right) \times Yield\ Stress = \left(\frac{1}{3}\right) \times 2.42 \times 10^8 Pa$

Maximum compressive stress = f_{wind}+f_d – Maximum compressible stress= 1.39×10^8 Pa

This stress also can be till the permissible stress of SS304. Solving for $t_{sk,}$

t_{sk} = 56 mm

The greater of the two t_{sk} is taken i.e. **t_{sk} = 95.2 mm**

15.5 Skirt Bearing Plate

Bolt circle diameter = Skirt diameter + 325 mm

=2920 + 325 = 3245 mm

Consider bolt circle diameter = plate diameter.

The compressive stress between bearing plate and concrete foundation is given by

$$f = \frac{total\ weight}{A} + \frac{M_w}{Z}$$

Mw= 7.35 X 10^7 Nm

Z = section modulus of area

$$Z = \frac{\pi}{32}\left(\frac{D_o^4 - D_i^4}{D_o}\right)$$

Z= 1.15 m^3

$$A = \frac{\pi}{4}(D_o^2 - D_i^2)$$

A=1.57 m^2

fc = 6.52 X 10^6 N/m^2

Assume fb = 157.5 N/mm^2

So thickness of bearing plate is given by

$t_b = \frac{3*f_c*l}{f_b}$

Where,

l = 0.5(Do-Di) = 0.1625m

so **tb = 57 mm**

15.6 Anchor Bolts

Let minimum weight of vessel = 25000kg

$f_{cmin} = \frac{minimm\ weight}{A} + \frac{M_w}{Z}$ = -6.21 X 10^6 N/m^2

As f_{cmin} is negative, the column must be anchored to concrete foundation by means of anchor bolts.

Number of bolts = n = D/600

Consider 8 bolts.

Consider M36 bolts (36 mm OD)

Abolt = 913 mm^2

fbolt = 4.74 N/mm^2

15.7 Nozzles

Velocity of gas in nozzle = 25 m/s

Velocity of Liquid = 2 m/s

Table 15.1: Sizing nozzles

Nozzle	Flowrate(m^3/s)	A(cm^2)	D(m)	D(mm)	Number of nozzles
Feed	0.023	117.58	0.12	120	1
Bottom outlet	0.024	121.91	0.12	120	1
Top outlet	23.25	9302.61	1.08	1100	1
Reflux	0.00086	4.33	0.023	25	1
Bottom inlet from Dowtherm reboiler	2.89	1157.59	0.38	380	1
Bottom inlet from steam reboiler	5.78	2315.18	0.54	540	1

Considering the case of the exit pump around nozzle,

The thickness of nozzle is given by,

$$t_n = \frac{PD_i}{2fJ - P}$$

$$t_n = 0.23mm$$

Since the nozzle is on the shell the thickness t_n should be greater than or equal to shell thickness.

$t_n = 10$ mm

Maximum vertical distance for compensation provided = $2.5t_n = 0.025$ mm (H_1)

Area to be compensated for the nozzle = $dt_n = 11\times10^{-4} = m^2$

Portion of shell having excess thickness = $A_s = d(t_s-t_s') = 1.80\times10^{-4}m^2$

Portion of nozzle external to vessel having excess thickness = $2H_1 (t_s-t_s') = 8.4 \times10^{-5}m^2$

Hence area requiring compensation = 830 mm^2

Considering a stiffening ring of ID = 0.13m and OD = 0.16m,

Thickness of ring required $=\frac{A}{OD-ID}$ = 0.027m = 27 mm

16. MATERIAL OF CONSTRCTION

Selection of Material of Construction in a Chemical Plant is as important as the Selection of the Process itself, if not more. This is because safety comes first. If say the MOC of equipment handling hazardous chemicals is inappropriately selected, it can lead to disastrous consequences if the equipment undergoes failure. An improper material can deteriorate prematurely by physical or chemical means and this will lead to release of hazardous chemicals thereby endangering safety and causing loss of production.

It is possible to select materials with excellent temperature resistance, good corrosion resistance, high tensile strength and toughness. However, the cost of materials is also a very important consideration. Using exotic materials of construction will lead to a very high capital investment and hence might not be economically feasible.

Factors to be borne in mind during selection of MOC:

• Chemical nature of substances handled.

• Operating Pressures and Temperatures.

• Cost of material

Maximum temperature in plant is around 250°C while minimum temperature is around 27°C. Also maximum pressure is 30bar while minimum is 15mmHg. Chemicals operated in this plant are corrosive to some extent so we have to use stainless steel for construction of plant. Between SS316 and SS304, price of SS316 is higher than that of SS304. SS316 contains 2% of Mo also Ni, Cr contents are different which ultimately gives better corrosion allowance for chloride ions. As this plant does not contain any chloride ions we can use SS304 for construction of this plant.

Table 16.1: SS304 composition

Compound	C	Si	Mn	Cr	Ni	P	S
% composition	0.08	0.75	2	18 / 20	8 / 10.5	0.045	0.03

17. STORAGE & UTILITIES

17.1 Storage

Storage tanks are required to store MEG, DEG and TEG produced in plant. Storage facilities are designed for two days inventories. Accordingly volume of storage tank is calculated and assuming H=D, dimensions of storage tank are obtained.

Table 17.1: Storage vessel sizing

Compound	Flowrate(m^3/hr)	Volume of tank(m^3)	H(or D) (m)
MEG	23.8	1290	11.8
DEG	3.26	190	6.2
TEG	0.45	25	3.2

17.2 Utilities

For heating of materials utility used in this plant is mainly dowtherm but along with it some heating duty is obtained from HP steam. Cooling water is used in condensers as well as heat exchangers to reduce process fluid temperature. MP stem is used in steam ejectors to create vacuum. Along with these utilities the most costing utility in plant is electricity.

Table 17.2: Utility consumption

Utility	Quantity per annum
MP steam (8 bar)	1044 ton
HP steam (20 bar)	138270 ton
Cooling water	58700 m^3
Dowtherm	2100 ton
Electricity	1.26 x 10^8kwhr

18. INSTRUMENTATION & PROCESS CONTROL

The smooth working of any chemical plant is normally ensured by the employment of intelligent and suitable control strategies. It is imperative that all aspects related to the working of the system are understood before an attempt is made to control the process.

In any chemical process, controlling of variables like temperature, pressure, composition, pH etc. is crucial. Reactors and other equipments, which are very critical, need to be controlled. Controllers are installed on such critical equipment to ensure that the functioning of the process is smooth.

The job of most control loops in a chemical process is to compare the value of variable from the system with set point and then give signal to controlling element for the final action. The level of control should be economically justifiable too. Selection of control loops is done considering following aspects.(Stephanopoulos, 2010)

- **Safety:**

The safe operation of a process is primary requirement for the well-being of the people in the plant and for its continued contribution to the economic development. Thus operating pressure, temperature, concentration of chemicals should always be within the allowable limits.

- **Product Specification:**

A plant should produce desired amount and quality of the final products.

- **Operational Constraints:**

The various types of equipments used in a chemical plant have constraints inherent to their operation, which have to be satisfied throughout the operation of a plant. For example, distillation column should not be flooded; tanks should not overflow or go dry.

- **Economics:**

The optimum control system has to be designed at given levels of minimum operating cost, maximum profit and so on.

- **Environmental Regulations:**

Various laws specify that the temperatures, concentrations of chemicals and flow rates of the effluents from a plant be within certain limits.

All requirements listed above dictate the need for continuous monitoring of the operation of a chemical plant and external intervention (control) to guarantee the satisfaction of the operational objectives. This is accomplished through a combined effort of automated and manual control systems.

Fixed Bed Tubular Reactor

Various variables that are needed to be controlled are

a) Pressure in the reactor

b) Temperature in the reactor

c) Flow rate in Reactor

Various manipulated variables are

a) Process Flow rate

b) Cooling media Flow rate

Measured variables

a) Pressure in the reactor

b) Temperature of the reactor

c) Feed Flow rate

.

Gas phase reactions are taking place in the reactor at high temperatures of 250°C and a pressure of 15bar. The reaction being exothermic heat given out is removed by passing cooling media in the shell side.

<u>Controlled Variables:</u>

- Pressure Control

The pressure in the reactor can be controlled by adjusting the outlet product stream flow rate. The reactor is designed on the operating pressure of 15bar. Thus in case the pressure build up or reduction of pressure in the reactor the control valve for the outlet stream flow rate can be changed so that desired pressure is achieved. PI controller can be used to control pressure.

- Temperature Control

The reactor is operated in an isothermal manner. Temperature has strong implications on the quality of the product and the selectivity offered by the reactor. The outlet temperature is

measured by the temperature transmitter TT and is given as an input to the controller TC which then takes appropriate action by manipulating the cooling media flow rate. If the temperature increases above certain limit then the flow rate is increased. If it decreases below the temperature set point then the flow rate is decreased. The temperature along the length of the reactor needs to be maintained at 250°C. As temperature needs to maintain at required value we require 0 offset. So for this we can use PID controller which will give us 0 offset.

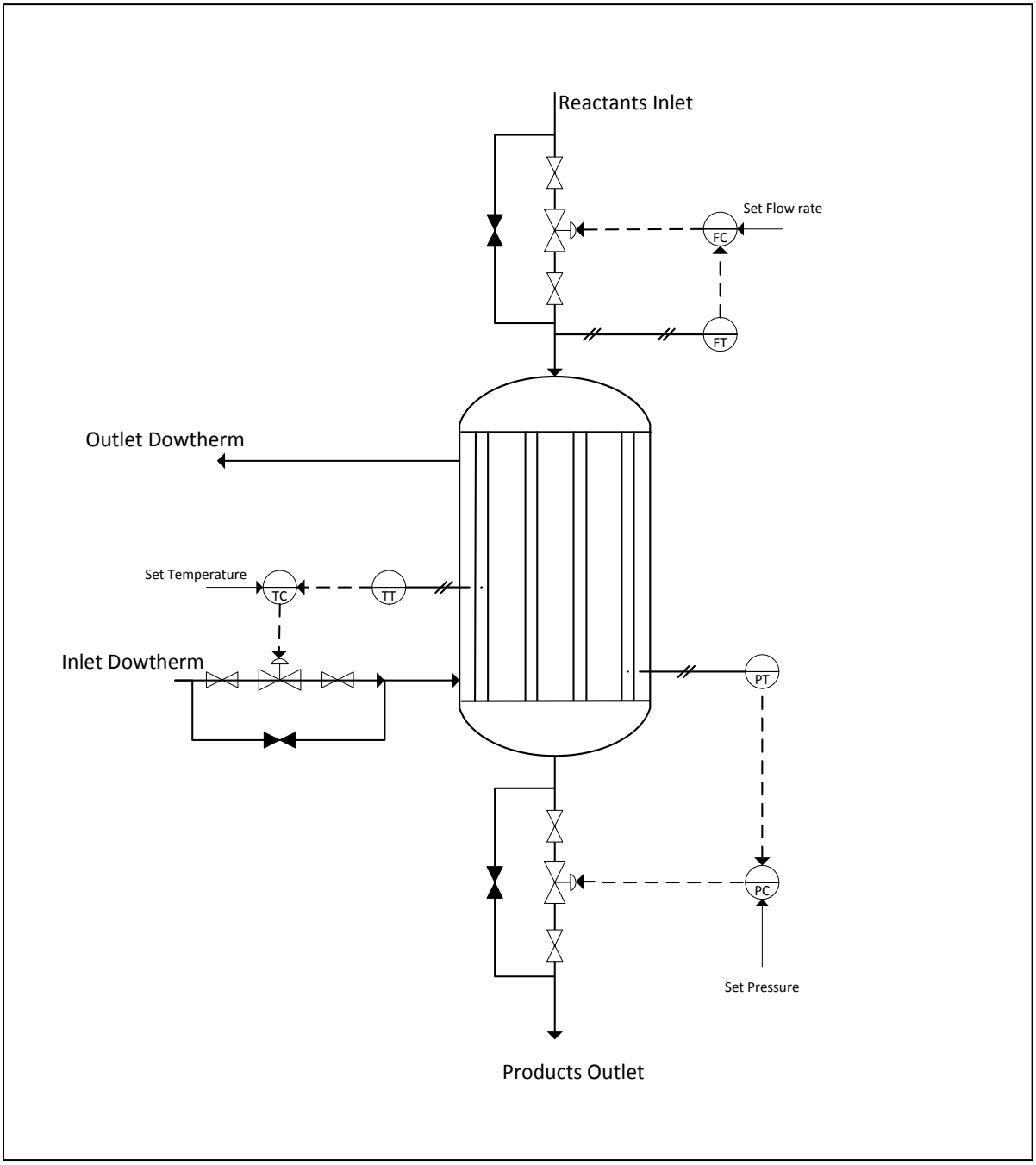

Figure 18.1: Instrumentation & Process Control of Reactor R101

19. HAZOP

A hazard is something which may cause harm and is an undesired event. An operability problem is a nuisance, or a break in production, with 'no' or minimal safety significance. A HAZOP study is a formal, systematic examination of a processing plant in order to identify hazards, failures and operability problems, and assess the consequences from such mal-operation leading to fewer lapses in safety, quality and production provided that the plant is installed according to the design and maintained in appropriate condition.

Here, a preliminary HAZOP analysis is carried out for the R101.The analysis is based on rules and guidewords mentioned by Wells (1996).

Please note: This chapter contains only a preliminary HAZOP analysis on the reactor R101. This analysis is neither complete nor exhaustive in terms of entire plant. A more detailed analysis needs to be carried out further. HAZOP analysis also needs to be carried out for all other equipment and lines in the plant.

Following is the HAZOP studies of ethylene oxide reactor which also involves guidewords that are explained below-

Table 19.1: HAZOP guidwords

Guide Words	**NO or NOT**	**MORE; LESS**	**AS WELL AS; PART OF**	**REVERSE**	**REVERSE OTHER THAN**
Meanings	The complete negation of the intention	Quantitative increase or decrease	A qualitative increase or decrease	The logical opposite of the intention	Complete Substitution

Table 19.2: HAZOP of reactor R101

Guide word	Deviation	Possible causes	Consequences	Action
NONE	No flow	1. Flow stopped upstream 2. Catalyst bed blocked 3.Line breakage	1. Process stops 2. Pressure build up in reactor 3. Release of explosive mixture to atmosphere	a) Ensure continuity of flow upstream and good communications from feed storage b) Pressure gauge in reactor is required. Emergency shutdown is necessary if blockage is not cleared itself c) Regular inspection of all lines so that the mixture is not released into the atmosphere since auto-ignition temperatures will be reached
MORE	More flow	1. wrong reading in flow controller	1.1 Increased load cooling media. 1.2. Reaction may not	d) Ensure over capacity of cooling media. e) Covered by a) f) Control valves must be designed efficiently and

			complete to give desired conversion 1.3 Reactor outlet may clog	provision must be provided for bypass. g) Insure good operating practices upstream h) Install pressure gauge at reactor inlet and outlet
	More Temperature	2.1 More compression 2.2 less cooling media flow 3. Partial blockage of	2.1 Increase in heat load 2.2 Inefficient use of energy upstream 2.3 Increase in temperature may favour production of compounds other than Ethylene oxide 3.1Increase pressure	i) Clear blockage or open valve j) Maintain proper cooling media inlet temperature

	More pressure	line (due to partially closed valve)	downstream	k) Install control valve at outlet to control pressure
LESS	Less flow	1. Reduced feed rate 2.Leaking flange	1.1 Reduced ethylene oxide production 1.2 Large amount of unreacted raw materials wasted	l) Proper process control required. m) Regular inspection of all lines n) Ensure good operating practices upstream.
	Less temperature	1. Less compression.	1.1 Reaction temperature not reached 1.2Ethylene oxide production decreased	o) Reduce cooling media flow
PART OF	Low ethylene	1. Ethylene feed	1.1 Reduced production of	p) Ensure Compressor

	concentration	compressor failure	ethylene oxide 1.2 Improper cooling media flow	working at required capacity
AS WELL AS	Impurities in feed	1. Poor feed quality	1.1 Formation of by-products	q) Test quality of feed regularly
OTHER	Maintenance	1. General equipment failure or catalyst changeover in reactor	1.1 Process stops.	r) Good practices in construction and operation s) Ensure shutdown and start-up procedures are well detailed

20. SAFETY HEALTH & ENVIRONMENT

Safety is the most important consideration in a chemical plant. A safe and comfortable environment is essential for the efficient operation of the plant. Hence due consideration needs to be given to these aspects in design stages. Control measures are taken to prevent exposures and contacts to harmful or objectionable level of contaminants. It is always desirable to have an inherently safe process.

The process to manufacture ethylene glycol involves use of equipment and conditions operating under varied temperature and varied pressure. Any leakage can lead to catastrophic consequences. In recent times, simply making profits at the expense of the environment is not justified. The process should have minimal environmental impact.

20.1 SAFETY

Safety in chemical industry is of paramount importance. In today's world, there is cut throat competition in the chemical industry. We cannot afford to have unsafe operation which might lead to accidents. Economic loss is one, but the major loss is loss to the reputation of the company hence effective safety factors need to be considered for the entire plant.

- **Fire and Explosion Prevention and Control**

In this plant both gaseous and liquid phase chemicals are involved. Gases like oxygen, carbon dioxide will not create explosion in plant but gases like ethylene and ethylene oxide may cause explosion in certain conditions. Ethylene and ethylene oxide are extremely flammable gases. If venting or leaking gas catches fire. Lower flammable limit for ethylene oxide in air is around 3%. Auto-ignition temperature for ethylene is 450°C and that for ethylene oxide is 429°C. In case of ethylene glycol Thermal decomposition produces acrid fumes. Also lower flame limit for EG is around 3.2 volume % and upper flame limit is around15.3 volume %.

- **Chemical Leakage**

In case of small spill absorb with an inert material and place it in an appropriate waste disposal container. Where as in case of large spill keep away from heat. Keep away from sources of ignition. Stop leak if without risk. Do not touch spilled material. Prevent entry into sewers, basements or confined areas; dike if needed. Be careful that the product is not present at a concentration level above TLV.

- **Mechanical hazards**

Machines should be well spaced out. Visual warnings of danger like colour schemes should be used to identify potential hazards.

- **Electrical hazards**

This occurs due to short circuit and may lead to fire in the plant area. Electrical wires are protected from fire and explosion. Proper maintenance of wiring and equipment and proper enclosure of high voltage equipment helps to avoid accidents.

20.2 HEALTH

All the compounds involved in the system are skin, eyes, and respiratory irritants. A detailed material safety data sheet should be provided in each unit, and plant personnel must be educated towards ill effects of chemicals handled and safety precautions to be taken. Also various protections such as respiratory protection, face and eye protection, safety showers and eye baths should be provided. Dust pollution in the packaging and raw material loading units must be taken care of by appropriate ventilation. All personnel working in these units must be provided with appropriate dust masks as standard procedure.

- **Respiratory Protection**

Maintain adequate ventilation in area where dust is present. Wear dust masks and use approved respirators in hazardous areas to prevent any adverse effects due to long term exposures.

- **Face and Eye Protection**

Splash goggles should be worn, along with hard hats.

- **Safety showers and eye baths**

Safety showers and eye baths are essential in any operation. They should be located in the immediate work area and readily accessible to personnel. Both should be tested routinely and frequently to ensure proper operation. Proper first aid measures should be readily accessible to the workers in the plant in the event of an accident. Each and every worker in the plant must be well versed will MSDS sheets of the compounds he is responsible to handle.

- **Noise**

Permanent damage to hearing can be caused at sound levels above about 90 dB, and it is normal practice to provide ear protection in areas where the level is above 80 dB.

20.3 ENVIRONMENT

As in today's world because of the stringent environment norms it is of prime concern for all the plant designers to keep the effluent to the environment as low as possible. It is of utmost importance to get sanctioning of a particular plant. Flue cases that are coming out from stripper contain mainly carbon dioxide and oxygen. Very small amount of ethylene oxide and ethylene are also present in flue gas. As the amount of Ethylene and Ethylene oxide is much less than permissible limit in air we can send it directly in the atmosphere. Similarly in case of liquid effluent, MEG will be there in effluent water only because of leakage. Otherwise there is no as such effluent present in this plant.

21. PROJECT & PLANT LAYOUT

21.1 Project layout

The plant layout plays an important role in efficient functioning as well as the safety of a plant. A good plant layout ensures easy accessibility to various services, efficient movement of materials and a safe operation, thereby reducing constructional as well as operating costs.(Sinott, 1994)

The ancillary buildings and services required on a site, in addition to the main processing units (buildings), will include:

- Storages for raw materials and products: tank farms and warehouses.
- Maintenance workshops.
- Stores, for maintenance and operating supplies.
- Fire stations and other emergency services.
- Utilities: steam boilers, power generation, refrigeration, transformer stations etc.
- Effluent disposal plant.
- Offices for general administration.
- Canteens and other amenity buildings, such as medical centres.
- Car parks.

While making plant layout the main reactors and its auxiliaries are located first. Storage tanks and utility generation systems are located away from main reactor systems for safety reasons. The various auxiliary buildings are services required on the site in addition to the main plant such as storage for raw material and product, maintenance workshops, process control room, administrative building, store for maintaining and operating supplies, utilities generation unit, R & D building, fire stations and emergency services and canteens and other such services.

Critical considerations that need to be accounted for while determining the plant layout are health and safety regulations, quick and easy transfer of materials between equipments, operational convenience, possible future expansion, maintenance, drainage, hygiene, natural light, logistics and economics.

The features of a good layout are

- Sufficient interplant / inter equipment space
- Ensuring high level of security and safety
- Minimized material handling
- Maximum proximity
- Ease in supervision / coordination of activity
- Built-in flexibility

Thus, in accordance with the above requirements, following things need to be kept in mind during plant layout:

1. Process units and auxiliary buildings should be laid out to give economic flow of material and personnel around the site also considering the direction of wind and seismic variations
2. The administrative section, canteen buildings should be segregated from the production units and are situated near entry gate, so the access to administrative building is not through the plant area. The R & D should be away from the gates for security reasons.
3. Roadways and network should surround the plant section, storage tank, utilities and administrative buildings, so as to have easy access for transport, maintenance.
4. Equipment layout should be such that it reduces the pumping load and pumping facilities need to be provided wherever essential.
5. The storage tanks and utilities are placed near the plant area for easy accessibility for all the equipment in the plant.
6. Also, the fire stations, duly equipped with fire fighting equipments, should be located at easily accessible location inside the plant premise.
7. The medical facility, health centre and canteen should be located at a convenient distance from both the administration building and the main plant.
8. The control room and quality control laboratory should be near to main plant to detect any disturbance in quality or operation. This allows prompt action to the problems detected.
9. Equipment that needs to have frequent operator attention should be located convenient to the control room. Valves, samples points and instruments should be located at convenient positions and heights.

10. Equipment should be located so that it can be easily associated with any future expansion of the process. At the same time unnecessary area wastage is not desirable.

The plant layout should ensure operational convenience with regard to both the flow of materials as well as people.

Table 21.1: Project layout section list

1	Front Gate	2	Back Gate
3	Main Plant	4	Fire & Safety Building
5	Utility	6	Administration Building
7	R & D Building	8	Canteen
9	Medical Centre	10	Security office
11	Product Storage	12	Air Separation Unit
13	Parking Area	14	Technical Services Centre
15	Workshop	16	Water Storage
17	Control Room	18	Future Expansion Area
19	Green Belt	20	Packaging Unit
21	Disposal Area		

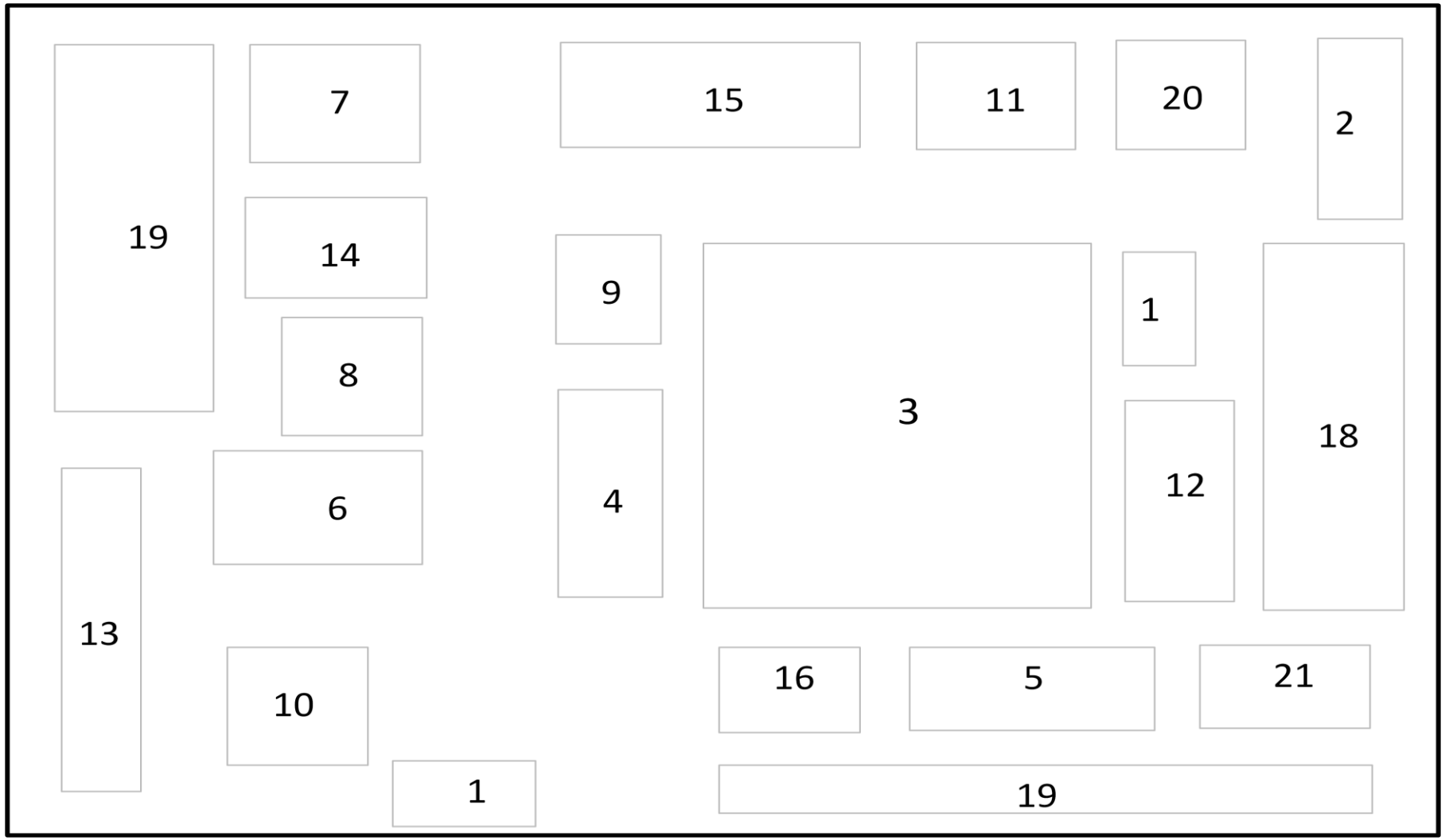

Figure 21.1: Project Layout

21.2 Plant layout

While making plant layout following factors were taken into consideration:

- Reactors should be near air separation unit (ASU)
- Distillation columns are placed near storage facility so that product can easily be transfer to tanks.
- Reboilers are placed on ground floor which will allow thermosyphon phenomenon.
- Condensers are placed on upper floor so that vapour can easily travel in that.
- EG reactor is quite long so we need to place it on ground.
- Each floor is around 3m in height.

Table 21.2: Equipment list

Equipment	Description	Equipment	Description
C101	EO absorption column	HX110	Steam reboiler of D101
C102	CO_2 absorption column	HX111	Dowtherm reboiler of D101
C103	CO_2 stripping column	HX112	Condenser of D101
D101	Atmospheric distillation column	HX114	Reboiler of D102
D102	Vacuum distillation column	HX115	Condenser of D102
D103	Vacuum distillation column	HX117	Reboiler of D103
F101	Flash drum	HX118	Condenser of D103
F102	Flash drum	HX104,HX105,HX106	Multi-effect evaporator
R101-A,B,C,D	EO reactors	HX121	CO_2 stripping column reboiler
R102	EG reactor	HX101,HX102,HX103,HX107, HX108,HX109,HX113,HX116, HX119,HX122	Heat exchangers
V104	Process liquid drum		

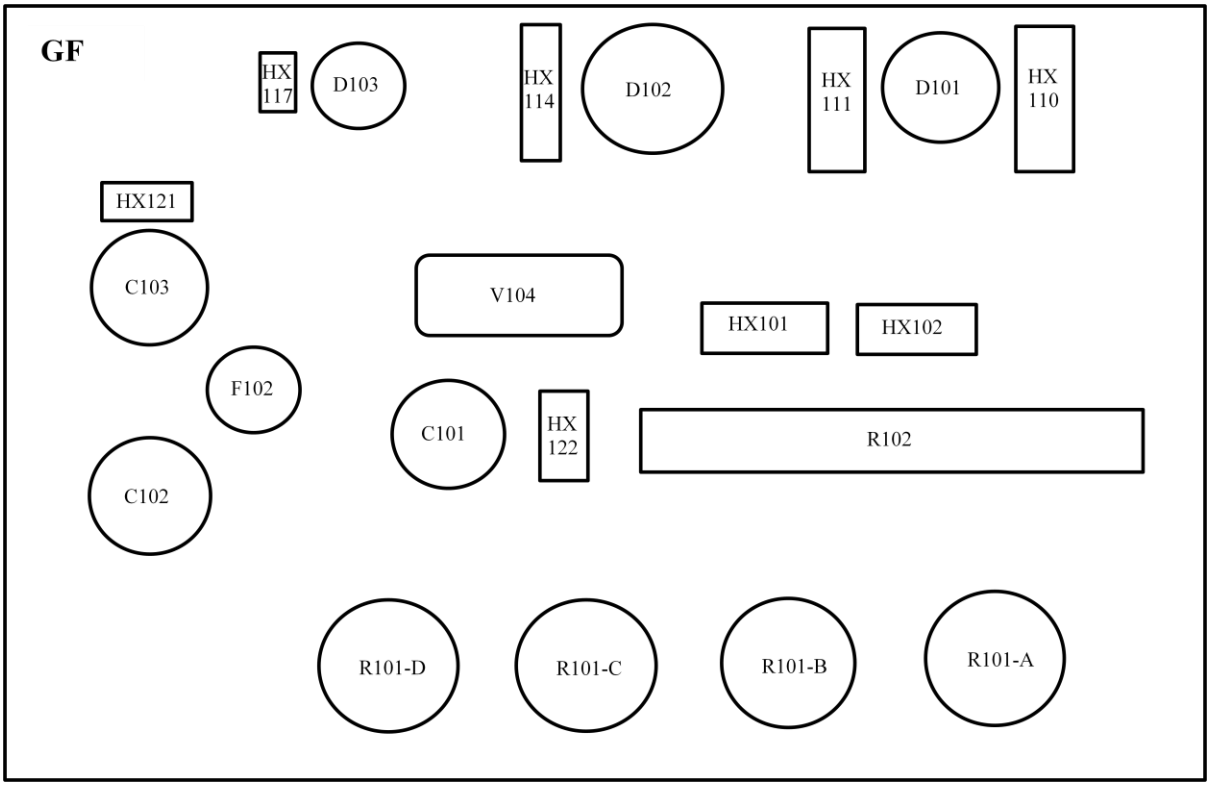

Figure 21.2: Plant layout ground floor

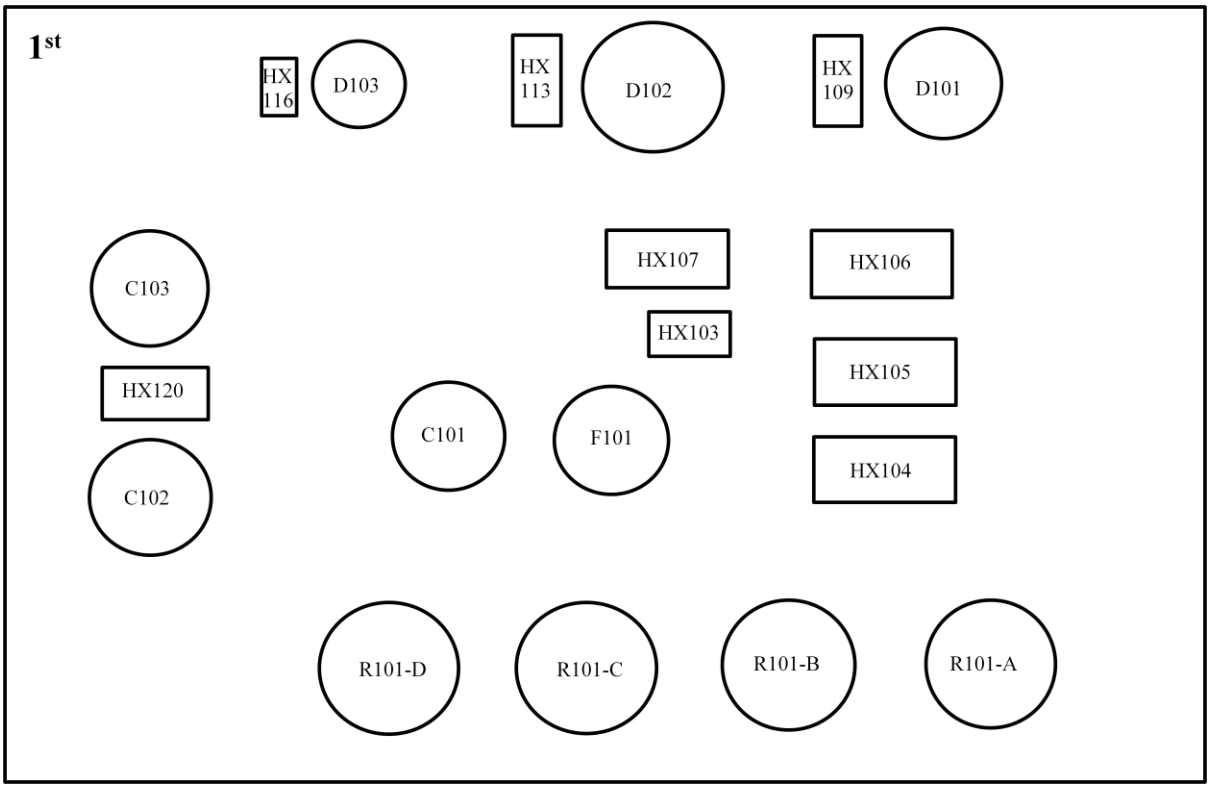

Figure 21.3: Plant layout first floor

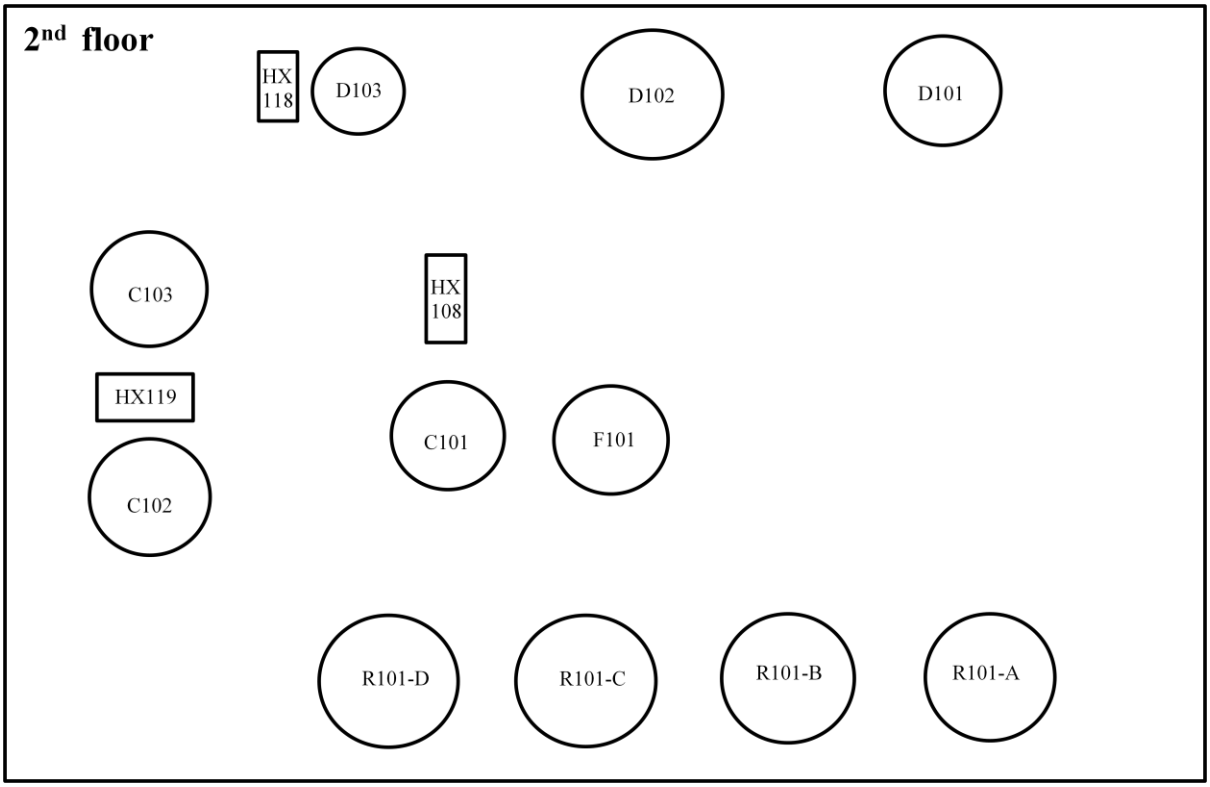

Figure 21.4: Plant layout second floor

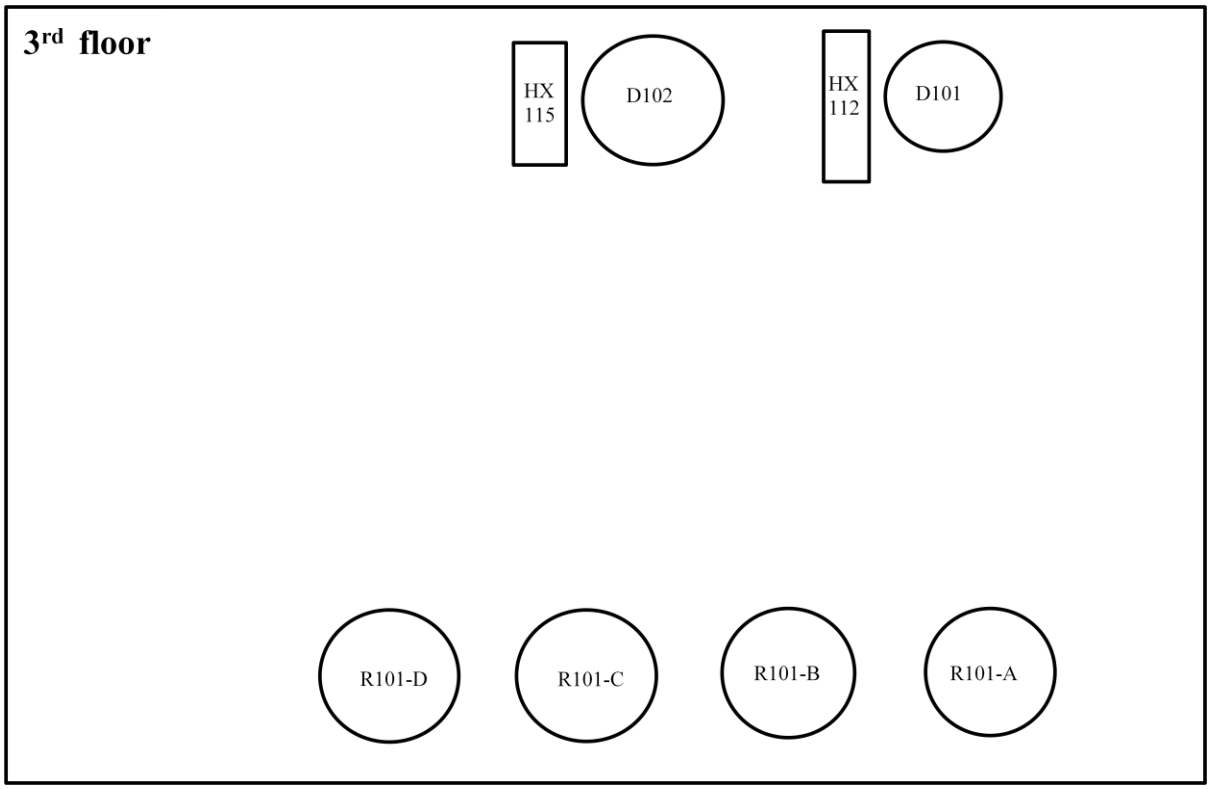

Figure 21.5: Plant layout third floor

22. PROJECT COST

For estimating the project cost, we estimate the plant and machinery cost and find out other costs as percentages of total project cost.

22.1 EQUIPMENT COST

Costs of equipments (plant and machinery) can be deduced as a direct function of the cost of material required and/or the size of that equipment, which are obtained from formulae, cost capacity correlations, graphs, and in certain cases, from equipment manufacturers' booklets. In cases where all data pertaining to the equipment isn't available, the following power – law model is used to deduce the cost of the equipment.(Mahajani & Mokashi, 2005)

Capacity factor: $\frac{Price_2}{Price_1} = \left(\frac{Capacity_2}{Capacity_1}\right)^n$

Where, capacity is in volume for vessels, volumetric flow rate for pumps and area for heat exchangers. The value of n is taken as 0.68 for general equipments and 0.58 for storage tanks.

22.1.1 EO Reactor (R101)

From design, we get,

Diameter of shell Ds = 3.1 m

Height of shell H = 11.1 m

Material of construction = SS304

Permissible value of stress = f = 115 N/mm^2

Pressure in reactor = 15 bar

Designed Pressure = 1.1*15 = 16.5 bar

Thickness of shell is given by

$$t = \frac{PD}{2fJ - P} + C$$

So thickness of shell = 30 mm

Density = 8000 kg/m3

Material required for shell is given by

$$V = \frac{\pi}{4}(D_o^2 - D_i^2)H$$

So material for shell = 3.25 m^3

Both top and bottom heads are identical and torospherical in shape

Material required for head is given by

$$V = 0.135(D_o^3 - D_i^3)$$

So material for both top and bottom head = 0.468 m^3

Cost of SS 304 including fabrication cost is Rs 250/ Kg

Total weight of head and shell material = 29761 Kg

Hence, cost of head and shell combined = Rs 74.4 lakhs

Adding 20% for the cost of flanges, coils and other accessories like nozzles, etc we get

Total Cost = Rs 89.27 lakhs

Number of tubes used = 1700

Length of Tubes = 11.1

Outer Diameter of tubes = 0.042m

Inner Diameter of tubes = 0.035m

Total Weight = 73570 kg

Total Cost of Tubes = Rs. 183.7 lakhs

Taking fabrication cost equal to 40% of material cost, we get

Total Cost of Reactor R-101= 1.4*272.97= Rs. 382.158 lakhs

Therefore total cost of the 4 reactors = Rs. 15.3 crores

22.1.2 Distillation column (D101)

From design we get,

Diameter of column = 2.9 m

Height of column = 10 m

Operating pressure = 1 bar

MOC of distillation column = SS304

So thickness of column = 10 mm

Volume of Shell material of column = 0.914 m^3

Heads of distillation column are tori-spherical in shape.

So material volume of each head = 0.065 m^3

Total MOC volume required = 0.914 + 2*0.065 = 01.05 m^3

Mass of MOC required = 8412 kg

Total cost of MOC = Rs. 8412*250 = Rs. 21 lakhs

We are considering 40% excess of this cost for nozzles, Distributors, Supports etc.

Cost of distillation column = 1.4*21 = Rs. 29.4 lakhs

Packing volume of distillation column = 54.55 m^3

Packing used in this column is Mellapak 250 Y structured packing.

Price of packing = Rs. 50000/m^3

So cost of packing in this distillation column = Rs. 27.27 lakhs

Taking fabrication cost equal to 40% of material and packing cost, we get

Total cost of D101 = 1.4*(29.4+27.27)

= Rs. 85.08 lakhs

Table 22.1: Costing of columns and reactors

Equipment	D (m)	H (m)	t in mm	Mass (kg)	Extra	Packing cost (Rs in lakhs)	Total cost (Rs. in lakhs)
D101	2.9	10.0	10	8412.05	40%	27.28	85.08
D102	3.2	10.5	12	11777.3	40%	34.21	113.14
D103	1.5	8.5	8	2813.32	40%	5.99	23.75
C101	2.0	8.5	8	3850.22	40%	11.35	37.23
C102	2.5	8.0	9	5275.03	40%	11.43	44.83
C103	2.5	9.0	9	5842.63	40%	11.43	47.81
V101	1.7	4.3	8	1786.6	20%		8.06
V102	1.5	3.7	8	1348.25	20%		6.07
V103	0.8	1.9	8	370.637	20%		1.67
V104	2.3	5.8	8	3262.17	20%		14.71
T101	11.8	11.8	28	103258	20%		223.04
T102	6.2	6.2	16	17105.1	20%		36.95

T103	3.2	3.2	10	3038.69	20%		6.56
F101	2.3	7.0	8	3851.1	20%		17.33
F102	1.1	3.2	8	794.627	20%		3.58
R101-A	3.1	11.1	30	119044	20%		535.70
R102	0.8	16.1	20	7102.45	20%		31.96
R2 tube	0.0	20.0	10	5694.02			21.35
R1 tube	0.0	11.1	12	294282			1103.56
Total							2362.4

22.1.3 Shell & Tube Heat Exchanger

Taking cost of STHE to be *Rs.* 1,20,000/m^2 and using the capacity index stated in the above section,

n = 0.68

Kettle type reboiler factor = 2.35

Evaporator factor = 1.8

So reboiler cost = 2.35 * STHE cost

So evaporator cost = 1.8 * STHE cost

We calculate the costs of heat exchangers as follows:

Table 22.2: Costing of heat exchangers

Equipment	**Type**	**Area (m^2)**	**Price (lakh)**
HX101	STHE	691.15	101.77
HX102	STHE	553.42	88.86
HX103	STHE	29.79	12.07
HX104	Evaporator	645.93	180.83
HX105	Evaporator	645.93	180.83

HX106	Evaporator	645.93	180.83
HX107	STHE	352.84	64.79
HX108	STHE	240.26	49.89
HX109	STHE	41.58	14.70
HX110	Reboiler	528.88	197.55
HX111	Reboiler	694.65	241.97
HX112	STHE	172.63	39.85
HX113	STHE	37.12	14.01
HX114	Reboiler	175.56	93.60
HX115	STHE	109.81	29.30
HX116	STHE	1.58	1.64
HX117	Reboiler	27.44	26.62
HX118	STHE	10.98	6.12
HX119	STHE	33.17	12.98
HX120	STHE	490.50	81.06
HX121	Reboiler	80.84	55.33
HX122	STHE	123.61	31.38
HX123	STHE	125.2782	32.04
HX124	STHE	16.56059	8.09
HX125	STHE	2.591679	2.29
HX126	STHE	107.5279	28.30
		Total	1776.71

22.1.4 Steam ejector

Cost of ejector has been estimated from Walas (1990, pp. 668).

It gives the following formula:

$$C = 11000 * f1 * f2 * f3 * X^{0.41}$$

Depending on the absolute vacuum required, recommendations have been made on the number of stages of the steam jet ejector required (Ludwig, Vol 1, 1999, pp. 352).

In our case (15 *mmHg*), we will need 2 stages. Hence f_2= 1.8.

MOC is Carbon Steel and so value of f_1 is 1.0. f_3= 1.0.

Leakage air = 3.57 *kg/hr*

And, suction pressure at ejector throat = 15 *mmHg*

Also X is given by

$$X = \frac{\frac{\text{lb}}{\text{hr}}\text{of air}}{\text{pressure in mm Hg}}$$

Hence, X= 7/0.454/15 = 0.62

Therefore, cost of ejector = 11000*1.0*1.8*1.0*$0.62^{0.41}$ = 15719 *$ = Rs.9.8lakhs*.

This cost was in 1990.

Marshal and swift process equipment index was 904 in 1990 while it is 1600 in 2013

Hence present cost = 1600/904*9.8

= Rs. 17.34 lakhs

Table 22.3: Costing of steam ejectors

Equipment	P (mm Hg)	Steam (kg/hr)	Type	Price (lakh)
D102	50	82.53	2 stage	20.24
D103	15	38.22	2 stage	17.34
HX106	456	9.67	1 stage	3.33

22.1.5 Pump

For 1 HP pump cost is Rs 15000 and power index for pumps is 0.63.

Taking one standby pump for each pump.

Table 22.4: Costing of pumps

Pump	Q(m3/hr)	Head (m)	Power (kw)	Power (HP)	Cost for 2 pumps (Rs. In lakh)
P01	106.29	20.00	3.65	7.00	1.02
P02	236.07	325.00	167.08	320.00	11.36
P03	87.25	20.00	4.28	9.00	1.20
P04	34.47	20.00	1.60	4.00	0.72
P05	32.52	20.00	1.50	3.00	0.60
P06	32.42	20.00	1.50	3.00	0.60
P07	32.82	20.00	1.52	3.00	0.60
P08	47.23	25.00	2.89	6.00	0.93
P09	84.66	25.00	5.19	10.00	1.28
P10	15.98	25.00	0.98	2.00	0.46
P11	15.98	25.00	0.98	2.00	0.46
P12	55.80	20.00	2.58	5.00	0.83
P13	4.19	25.00	0.26	0.50	0.19
P14	25.00	20.00	1.36	3.00	0.60
P15	0.43	20.00	0.03	0.50	0.19
P16	3.29	20.00	0.18	0.50	0.19
P17	126.74	25.00	7.76	15.00	1.65

P18	118.20	25.00	7.24	15.00	1.65
P19	43.67	20.00	2.38	5.00	0.83

22.1.6 Compressor

Six compressors are used in this plant. For calculating cost of compressors reference cost of compressor is used which is 300HP compressor for 46lakhs.

While power index is 0.63

Table 22.5: Costing of compressors

Compressor & Turbine	Flow rate (mol/hr)	Power (HP)	Cost (Rs. In lakh)
J01	518471.77	1800.00	142.23
J02	588542.66	2000.00	151.99
J03	4764709.89	9000.00	392.05
J04	4967915.14	7500.00	349.51
J05	5620839.20	15000.00	540.89

Total equipment cost = Rs. 5782.03 lakhs

Estimation of Plant & Machinery Cost

Table 22.6: Estimation of plant and machinery cost

Component	% of Equipment Cost	Cost (Rs. in lakhs)
Equipment	-	5782.03
Piping	25.00	1445.51
Instrumentation	20.00	1156.41
Electrical	25.00	1445.51
OSBL facilities	30.00	1734.61
	SUB total A	11564.06
Spares	5% of A	578.20
	Total B	12142.26
	% of B	
Packaging and forwarding	3.00	364.27
Transportation	3.00	364.27
Insurance	1.00	121.42
Installation	15.00	1821.34
Insulation	2.00	242.85
Sales tax	10.00	1214.23
Octroi	3.00	364.27
Excise	15.00	1821.34
	Grand total	18456.24

To get delivered equipment cost, we must add to this, cost of statutory duties and transport which adds up to 20%.

Estimated total delivered equipment cost = Rs. 13420.3 lakhs

Estimation of Total Project Cost

The project can now be estimated based on rule of thumb by breaking up the project cost components as the percentage of overall project cost (Mahajani and Mokashi, 2005).

Table 22.7: Estimation of total project cost

Cost Component	% of total project cost	Cost (Rs. In lakhs)
Land and Site Development	5.00	2013.41
Building and Civil Works	8.00	3221.45
Plant and Machinery Cost	55.00	22147.48
Engineering and Know How Fees	5.00	2013.41
Miscellaneous Fixed Assets	3.00	1208.04
Contingencies	5.00	2013.41
Preoperative Expenses	12.00	4832.18
Preliminary and capital issue related expenses + margin money	7.00	2818.77
Total Project cost	100.00	40268.15

So total project cost = Rs. 40268.2 lakhs

23. COST OF PRODUCTION

This chapter deals with the various parameters that comprise the gross cost of production. It represents operating expenses, which are of recurring in nature. They have significant impact on selling price and hence the profitability of the project. Following are the main components of cost of production:

23.1 Raw Material Cost

In raw materials along with oxygen and ethylene price of catalyst is also considered to calculate cost of raw materials.

Life cycle of catalyst used is 5 years

Table 23.1: Raw material cost

Raw material	Requirement		Cost Rs/kg	Annual cost (Rs.in lakhs)
	kg/hr	TPA		
Ethylene	16479.19	131833.56	75.00	98875.17
Oxygen	16591.10	132728.77	18.00	23826.17
Catalyst	-	8.8	30000.00	1332.43
Total				124033.77

23.2 Utility Cost

Utilities used in plant are cooling water, steam, dowtherm and electricity. In case of dowtherm residence time of dowtherm in plant is assumed to be 10 hrs. While life cycle of dowtherm is assumed to be 5 years.

Similarly in case of cooling water, residence time in plant is assumed to be 10 hrs. While blow-down and evaporative losses are considered to be 2%.

Table 23.2: Utility cost

Utility	Flow rate	Annual consumption	Unit cost (in Rs.)	Total cost (Rs. in lakhs)
cooling water	5755m^3/hr	58704 m^3	15	8.81
Dowtherm	1014.6 ton/hr	2029394 kg	170	3568.01
Steam(MP)	103.4 kg/hr	1043299 kg	0.9	9.39
Electricity	15808 kwhr	126469 Mwhr	6	7586.85
Steam(HP)	17219 kg/hr	137753 ton	1.2	1659.22
Total				12832.27

Variable cost = raw material cost + utility cost

So, Variable Cost = Rs. 136866 lakhs/annum

23.3 Indirect Cost

Table 23.3: Indirect cost

Component	Contribution	Total cost (Rs. in lakhs)
operating labour cost (OLC)	10% of Project cost	4026.82
Repairs and maintenance	5% of Project cost	2013.41
Supervision	15% of OLC	604.02
Labour	15% of OLC	604.02
Supplier	15% of maintenance and repair	90.60
Indirect product cost		7338.87

23.4 Fixed Charges

Table 23.4: Fixed cost

Component	Contribution	Total cost (Rs. in lakhs)
local taxes	4% of Project cost	1610.73
Insurances	1% of Project cost	402.68
Total fixed charges		2013.41

23.5 Plant Overheads

Plant overheads = 40 % (OLC + Supervision + Repairs and Maintenance Cost)

= Rs. 2657.7 lakhs

23.6 General Expenses

Table 23.5: General expenses

Component	Contribution	Total cost (lakhs)
Administration cost	25% of OLC	1006.70
Distribution and selling	0.2% of Project cost	80.54
	Total	1087.24

23.7 Salary & Wages

Salary and Wages = 9 % of variable cost

= Rs. 12317 lakhs

Therefore fixed cost = Total indirect cost + Fixed charges + Plant Overheads

+ General Expenses + Salary and Wages

Fixed cost = Rs. 25415.2 lakhs

Therefore,

Cost of production = variable cost + fixed cost

= 136866 + 25415.2

= Rs. 162281.2 lakhs

We manufacture 200000 TPA of MEG along with 26313 TPA of DEG and 3786 TPA of TEG.

So cost of production = Rs. 70.52/kg

24. WORKING CAPITAL

24.1 Raw Materials

Table 24.1: Raw material working capital

Raw material	TPD	NO of days	Amount in ton	Cost (Rs/kg)	Total cost(Rs. in lakhs)
Ethylene	395.50	2.00	791.00	75.00	593.25
Oxygen	398.19	2.00	796.37	18.00	142.96
Total					736.21

24.2 Utilities

Table 24.2: Utilities working capital

Utility	Unit cost	2 days consumption	Total cost (Rs. in lakhs)
cooling water	15.00 Rs/m3	352.2 m3	0.05
Dowtherm	170.00 Rs/kg	12592 kg	21.41
Steam(MP)	0.90 Rs/kg	6260 kg	0.05
Electricity	6.00 Rs/kwhr	758685 kwhr	45.52
Steam(HP)	1.2 Rs/kg	829609 kg	9.96
Total			76.99

24.3 Product

Table 24.3: Product working capital

	kg/hr	for 2 days (in kg)	Cost of production (Rs./kg)	Total cost (Rs. in lakhs)
Product	28762.5	1380576.00	70.53	974

24,4 Other Fixed Expenses

These are estimated as 10% of the product inventory cost.

Thus, other fixed expenses = 10% of (974)

Other Fixed Expenses= Rs. 97.4 lakhs

So Total working capital = Rs. 1884.2 lakhs

The break-up of working capital can be assumed to be as:

Table 24.4: Working capital break-up

Component	Contribution	Total cost (Rs. in lakhs)
Borrowed working capital	75% of total working capital	1413.19
Margin Money	25% of total working capital	471.06
Total working capital		1884.2

25. FINANCIAL ANALYSIS

The values of various financial terms that will be required for further analysis is summarized below: (Amounts are in lakhs of rupees unless specified)

Table 25.1: Capital investment

Total fixed capital investment		40268.15
Debt: Equity		2:1
Term loan		26845.5 @ 12% interest p.a.
Equity		13422.7
Equity Break-up	**Promoter's contribution (51 %)**	6845.59
	Institutional participation(20 %)	2684.54
	Public issue (29%)	3892.59
Borrowed working capital		1413.2 @ 16 % interest p.a.

Term Loan Repayment Period = 10 years paid half yearly in equal installments

Moratorium Period = 2 years

Working Capital Repayment Period = 5 year paid annually in equal installments

25.1 Term Loan Repayment Schedule

Table 25.2: Term loan repayment Schedule

Years	Principle Remaining	Interest Payable	Principle Paid	Instalment Paid
0.5	26845.44	1610.73	0.00	1610.73
1	26845.44	1610.73	0.00	1610.73
1.5	26845.44	1610.73	0.00	1610.73
2	26845.44	1610.73	0.00	1610.73

2.5	25799.75	1610.73	1045.69	2656.41
3	24691.32	1547.98	1108.43	2656.41
3.5	23516.39	1481.48	1174.93	2656.41
4	22270.95	1410.98	1245.43	2656.41
4.5	20950.80	1336.26	1320.16	2656.41
5	19551.43	1257.05	1399.37	2656.41
5.5	18068.11	1173.09	1483.33	2656.41
6	16495.78	1084.09	1572.33	2656.41
6.5	14829.11	989.75	1666.67	2656.41
7	13062.45	889.75	1766.67	2656.41
7.5	11189.78	783.75	1872.67	2656.41
8	9204.75	671.39	1985.03	2656.41
8.5	7100.62	552.29	2104.13	2656.41
9	4870.25	426.04	2230.38	2656.41
9.5	2506.05	292.21	2364.20	2656.41
10	0.00	150.36	2506.05	2656.41

25.2 Borrowed Working Capital Repayment Schedule

Table 25.3: Borrowed working capital repayment schedule

Years	Principle Remaining	Interest Payable	Principle Paid	Instalment Paid
0.5	942.13	75.37	0.00	75.37

1	942.13	75.37	0.00	75.37
1.5	942.13	75.37	0.00	75.37
2	942.13	75.37	0.00	75.37
2.5	813.70	75.37	128.43	203.80
3	675.00	65.10	138.70	203.80
3.5	525.20	54.00	149.80	203.80
4	363.42	42.02	161.78	203.80
4.5	188.70	29.07	174.72	203.80
5	0.00	15.10	188.70	203.80

25.3 Depreciation Schedule

To estimate depreciation, the preoperative expenses and contingencies are distributed among the other project cost components, in their corresponding proportions. The initial project cost components are shown in project cost estimation. The following depreciation rates are used for the estimation of the working results:

Table 25.4: Depreciation rates

Cost Component	% SLM	% WDV
Buildings and civil work	3.34	10.00
Plant and Machinery	10.34	25.00
Miscellaneous Assets	5.00	20.00

SLM – Straight Line Method

WDV – Written Down Value Method

Table 25.5: Depreciation amounts

Year	B & C		P & M		MFA	
	SLM	WDV	SLM	WDV	SLM	WDV
0	-	-	-	-	-	-
1	53.80	161.07	1145.02	2768.44	30.20	120.80
2	53.80	144.97	1145.02	2076.33	30.20	96.64
3	53.80	130.47	1145.02	1557.24	30.20	77.31
4	53.80	117.42	1145.02	1167.93	30.20	61.85
5	53.80	105.68	1145.02	875.95	30.20	49.48
6	53.80	95.11	1145.02	656.96	30.20	39.59
7	53.80	85.60	1145.02	492.72	30.20	31.67
8	53.80	77.04	1145.02	369.54	30.20	25.33
9	53.80	69.34	1145.02	277.16	30.20	20.27
10	53.80	62.40	1145.02	207.87	30.20	16.21
Total	537.98	1049.10	11450.25	10450.14	302.01	539.17

25.4 Sales Realization

Table 25.6: Sales realization

Product	per annum (kg)	Price (Rs./kg)	Total annual cost (Rs. in lakhs)
MEG	200000000.00	75.00	150000.00
DEG	26313849.98	85.00	22366.77

TEG	3785843.47	110.00	4164.43
Total			176531.20

25.5 Break Even Analysis

The following assumptions are made while carrying out the break-even analysis:

- All expenses are bifurcated into fixed and variable costs.
- The market conditions are ideal i.e. whatever is produced is sold immediately.
- The selling expenses are fixed as some % of sales.
- The following annualized (fixed) costs are not dependant on capacity utilization, namely, interest, charges on term loan, depreciation, salary and wages of plant personnel, factory overheads and administrative expenses.

The equation to estimate the breakeven capacity is:

SX = VX + F

where,

X = Break-even capacity

S = Price of one ton of product

V = Variable cost of production per ton

F = Fixed cost of production

Therefore, $X = \frac{F}{S - V}$

Table 25.7: Breakeven analysis

Variables	Values
S	0.76 lakhs/tonnes
V	0.6 lakhs/tonnes
F	28330 lakhs/annum
X	164345.5 TPA

Breakeven capacity = 71.4%

25.6 Ratio Analysis

25.6.1 Performance Ratios

- **Payback Period**

Assuming 100% capacity utilization.

Gross Profit = Rs. 14250 lakhs/annum

Total Capital Investment = Project Cost + Borrowed Working Capital

= Rs. 41681 lakhs/annum

$$Payback\ \ Period = \frac{\text{Total Capital Investment}}{\text{Gross Profit}} \times 12$$

= 35.1 = 36 months

- **Return on Investment (ROI)**

Assuming 100% capacity utilization

$$ROI = \frac{\text{Gross Profit}}{\text{Total Capital Investment}} \times 100$$

= 35.38 %

- **Profit Margin**

Assuming 100% capacity utilization

$$Profit\ margin = \frac{\text{Gross Profit}}{\text{Sales}} \times 100$$

= 8.07%

- **Net Assets Turnover**

$$Net\ assets\ turnover = \frac{\text{Sales}}{\text{Project Cost}} \times 100$$

= 4.38

25.6.2 Financial Ratios

- **Debt to Equity**

  D: E = 2**:1**

- **Interest Cover**

100% capacity utilization is assumed. Interest cover is calculated for the first year.

$$Interest\ cover = \frac{\text{Gross Profit}}{\text{Interest}} \times 100$$

$$= 4.22$$

<u>Estimates of Working Results</u>

A dividend of 20% per year is assumed

Terms Involved:

- Gross profit = Sales – Gross cost of production
- Operating profit = Gross profit – Financial expenses – SLM depreciation
- Profit for tax = Gross profit – Financial expenses- WDV depreciation
- Corporate tax = 30 % taxable profit
- Profit after tax = Gross profit – Financial expenses – Corporate tax
- Profit for dividend = Profit after tax – SLM depreciation
- Profit after dividend = Profit for dividend – dividend
- Net cash accruals = Profit after dividend + depreciation

The estimate of working capital for the first ten years is presented below:

Table 25.8: Estimates of working results-1

Year	1.00	2.00	3.00	4.00	5.00
% capacity Utilization	80.00	80.00	85.00	85.00	85.00
Capacity	184079.75	184079.75	195584.74	195584.74	195584.74
Sales	141224.96	141224.96	150051.52	150051.52	150051.52
Gross cost of production	134907.99	134907.99	141751.30	141751.30	141751.30
Gross Profit	6316.97	6316.97	8300.22	8300.22	8300.22
Financial Expenses	3372.19	3372.19	3299.18	2988.48	2637.48
Depreciation(SLM)	1229.02	1229.02	1229.02	1229.02	1229.02
Depreciation(WDV)	3050.31	2317.94	1765.03	1347.21	1031.11
Operating Profit	1715.75	1715.75	3772.02	4082.72	4433.73
Taxable profit	-105.54	626.84	3236.02	3964.54	4631.64
Corporate tax	-31.66	188.05	970.81	1189.36	1389.49
profit after tax	2976.44	2756.72	4030.24	4122.38	4273.26
Profit for dividend	1747.41	1527.70	2801.22	2893.36	3044.23
Dividend	436.85	381.92	700.30	723.34	761.06
profit after dividend	1310.56	1145.77	2100.91	2170.02	2283.18
Net cash Accruals	2539.58	2374.80	3329.94	3399.04	3512.20

Table 25.9: Estimates of working results-2

Year	6.00	7.00	8.00	9.00	10.00
% capacity Utilization	90.00	90.00	95.00	95.00	100.00
Capacity	207089.72	207089.72	218594.71	218594.71	230099.69
Sales	158878.08	158878.08	176531.20	176531.20	176531.20
Gross cost of production	148594.60	148594.60	155437.90	155437.90	162281.20
Gross Profit	10283.48	10283.48	21093.30	21093.30	14250.00
Financial Expenses	2240.87	1792.65	1455.13	978.32	442.58
Depreciation(SLM)	1229.02	1229.02	1229.02	1229.02	1229.02
Depreciation(WDV)	791.66	609.99	471.92	366.76	286.48
Operating Profit	6813.59	7261.80	18409.14	18885.95	12578.40
Taxable profit	7250.95	7880.84	19166.25	19748.22	13520.94
Corporate tax	2175.29	2364.25	5749.88	5924.47	4056.28
profit after tax	5867.33	6126.58	13888.29	14190.51	9751.14
Profit for dividend	4638.30	4897.55	12659.27	12961.49	8522.12
Dividend	1159.58	1224.39	3164.82	3240.37	2130.53
profit after dividend	3478.73	3673.16	9494.45	9721.12	6391.59
Net cash Accruals	4707.75	4902.19	10723.47	10950.14	7620.61

25.7 Discounted Profit Flow Analysis

- **Weighted Average Cost of Capital (WACC)**

$$WACC = \frac{D.\,i_t + E.\,i_E}{D + E}$$

I_t = interest on term loan = 0.12

r_E = desired return on equity = 0.3

WACC = 0.18

- **Hurdle Rate of Return (K)**

K > WACC

Hence K is taken as 25 %

- **Present Value of Profit**

$$PV = \sum_{n=1}^{10} \frac{P_n}{(1 + K)^n}$$

P_n= Gross profit projection for nth year

PV = Rs. 50879 lakhs

- **Present Value of Investment**

Total project cost = Rs. 40268 lakhs

We assume that it took two years for the construction of the project.

In first year Rs 26845 lakhs were spent whereas in the next year Rs 13422 lakhs were spent.

Hence present value of Investment = (1 + K) I1 + I2

= (1 + 0.25) x 26845 +13422

= Rs. 46979 lakhs

- **Net Present Value (NPV)**

$$NPV = \sum_{n=1}^{10} \frac{P_n}{(1 + K)^n} - I_o$$

NPV = Rs. 3900 lakhs

- **Profitability Index (PI)**

$$PI = \sum_{n=1}^{10} \frac{\frac{P_n}{(1+K)^n}}{I_o}$$

$$PI = 1.1$$

- **Internal Rate of Return (IRR)**

$$\sum_{n=1}^{10} \frac{P_n}{(1+IRR)^n} = I_o$$

On solving we get,

IRR = 0.275

So we have,

IRR>WACC, also IRR>K, hence project is recommended.

26. CONCLUSION

The technical and economic feasibility of putting up a 200000TPA of Ethylene glycol plant in India has been reviewed. On the basis of the calculations for the economic feasibility of the process, total project cost comes out to be Rs. 40268 lakhs giving a return on investment (ROI) of 35.38 % (payback period of 36 months). The profitability index value of 1.1 (greater than 1) shows the profitability of the project. Thus, the project on the basis of the above analysis is definitely profitable and economically feasible.

The installed capacity of 200000TPA offers great flexibility in meeting the demands of the product. The demand of the above mentioned products is ever increasing hence the market can be assumed to be stable and increasing. This even gives an opportunity of forward integration of the plant to any of the products mentioned in report. The location at GIDC, Jamnagar ensures that raw material availability is never a problem as well as the export and import is easy.

So, we can conclude that setting up this plant in India would lead to substantial profits. However, it is to be noted that this feasibility study has been done considering some ideal situations. Also, the project costs may vary depending process licensing fees, shipping of proprietary equipments, etc. Some of the assumptions made are stability of raw material, product prices and market demands, 100% product sale and negligible losses in material and energy. It has been assumed that the plant functions to its full capacity from commencement of production, which has contributed in reduction of the payback period. The time value of money also has not been accounted for. To get clearer scenario, a detailed feasibility report needs to be done. This report justifies the need to conduct a detailed feasibility report to come up with more realistic figures.

27. REFERNCES

Bhanage, B. M., Fujita, S., He, Y., Ikushima, Y., & Shirai, M.." Concurrent synthesis of dimethyl carbonate and ethylene glycol via transesteri ® cation of ethylene carbonate and methanol using smectite catalysts containing Mg and / or Ni",Ctalysis Letters, vol-*83, Nos3-4,*November (2002).

Celik, F. E., Lawrence, H., & Bell, A. T. "Synthesis of precursors to ethylene glycol from formaldehyde and methyl formate catalyzed by heteropoly acids". *Journal of Molecular Catalysis A: Chemical*, *288*,pp 87–96, april (2008).

Dettwiler, R., Baiker, A., Rieharz, W., Laboratorium, T., Hochschule, E. T., & Zurich, C. "Kinetics of Ethylene Oxidation on a Supported Silver Catalyst",Helvetica Chimica Acta,vol. 62, Nr. 177, (1979).

Hewitt G., Shires G. and Bott T., “Process Heat Transfer”, CRC Press, New York, pp 573-595, Table 13.1 (1994).

Joshi, V., & Mahajani, V. V.. *Process Equipment Design (3 Edition)*. Macmillan India Limited, (2000).

Levenspeil O., “Chemical Reaction Engineering”, John Wiley and Sons Inc, New York, pp 180-181, 523-546, (1999).

Ma, X., Chi, H., Yue, H., Zhao, Y., Xu, Y., & Lv, J.." Hydrogenation of dimethyl oxalate to ethylene glycol over mesoporous Cu-MCM-41 catalysts". *AIChE journal, vol. 59, no.-* 7 July (2013).

Mahajani V. and Mokashi S., “Chemical Project Economics”, Macmillan, New Delhi, (2005).

Melhem G., Gianetto, Levin M., Fisher H., Chippett, Singh S., Chipman P, "Kinetics of the Reaction of Ethylene Oxide with Water and Ethylene Glycol" *Process Safety Progress* vol. 20, No. 4(*December 2001).*

Ooms, R., Dusselier, M., Geboers, J. a., Op de Beeck, B., Verhaeven, R., Gobechiya, E., Sels, B. F. " Conversion of sugars to ethylene glycol with nickel tungsten carbide in a fed-batch reactor: high productivity and reaction network elucidation". *Green Chemistry*, vol. *16*(2), pp 695-707, (2014).

Perry's Chemical Engineers' Handbook, Mc. Graw Hill,(1997).

Sinott R., "Coulson & Richardson's Chemical Engineering: Chemical Engineering Design", Butterworth-Heinemann, Burlington,(1994).

Stephanopoulos G., "Chemical Process Control", PHI Learning Pvt. Ltd., New Delhi, pp 81-89, 461-467, (2010).

Sun, J., & Liu, H. "Selective hydrogenolysis of biomass-derived xylitol to ethylene glycol and propylene glycol on Ni/C and basic oxide-promoted Ni/C catalysts". *Catalysis Today*, vol. *234*, 75–82, (2014).

Sundmacher, K., Peschel, A., Karst, F., & Freund, H. " Analysis and optimal design of an ethylene oxide reactor". *Chemical Engineering Sciences*,vol. *66*, 6453–6469, Septempber (2011).

Treybal R., "Mass Transfer Operations", McGraw Hill, Singapore, pp 661-672,(1981).

Ullmann, "Ethylene oxide", Ullmann's encyclopedia of industrial chemistry
New York Wiley-Interscience Edition, New York Academic Press, pp 547-568 (2002)

Ullmann, "Ethylene glycol", Ullmann's encyclopedia of industrial chemistry
New York Wiley-Interscience Edition, New York Academic Press, (2002)

Walas SM. Chemical Process Equipment – Selection & Design. Butterworth Heinermann, (1990).

Westerterp, K. R., & Ptasinski, K. J. "Safe design of cooled tubular reactors exothermic, multiple reactions; parallel reactions-ii". *Chemical Engineering Sciences*, vol. *39*(2), 245–252, (1984).

Yue, H., Zhao, Y., Ma, X., & Gong, J. " Ethylene glycol: properties, synthesis, and applications". *Chemical Society Reviews*, vol. *41*(11), 4218–44,2012.

Chemistry-reference (http://www.chemistry-reference.com) Accessed on 20th august 2014.

http://www.sulzer.com/en/media/Documents/ProductsAndServices/Separation_Technology/Structured_Packings/Brochures/Structured_Packings.pdf

Chemical & Petrochemicals Manufacturers Association, India. (http://www.cpmaindia.com/ethylene_about.php) Accessed on 1st sept 2014

http://www.dow.com/ethyleneglycol/about/properties.htm Accessed on 2nd sept 2014

APPENDIX A- MATERIAL SAFETY DATA SHEET

ETHYLENE

SECTION 1: CHEMICAL PRODUCT

Product Name: Ethylene

CAS No.: 74-85-1

Chemical Name: Ethene

Chemical Formula: C_2H_4

Synonym: Acetene; Ethene; Ethylene; Olefiant Gas; Bicarburetted Hydrogen;

SECTION 2: PHYSICAL AND CHEMICAL PROPERTIES

Physical state: gas

Colour: colourless

Physical form: compressed gas

Odour: sweet odour

Taste: sweet taste

Molecular weight: 28.05g/mol

Boiling point: -155 ^{o}F (-104 ^{o}C)

Freezing point: -272 ^{o}F (-169 ^{o}C)

Vapour pressure: 760 mm Hg @ -104 ^{o}C

Vapour density (air=1): 1.0

Specific gravity: Not applicable

Density: 1.261 g/L @ 0 ^{o}C

Water solubility: 22.6%

pH: Not applicable

Volatility: 100%

Odour threshold: Not available

Evaporation rate: Not applicable

Viscosity: 0.0093 cp @ 0 ^{o}C

Coefficient of water/oil distribution: Not applicable

Solvent solubility:

Soluble in alcohol, ether, acetone, benzene

SECTION 3: FIRE AND EXPLOSION DATA

Flammability of the Product: Severe fire hazard. Severe explosion hazard. Pressurized containers may rupture or explode if exposed to sufficient heat. Electrostatic discharges may be generated by flow or agitation resulting in ignition or explosion.

Auto-Ignition Temperature: 842 ^{o}F (450 ^{o}C)

Flammable Limits: LOWER: 2.7% UPPER: 36%

Products of Combustion: These products are carbon oxides (CO, CO_2).

Fire Hazards in Presence of Various Substances:

Highly flammable to flammable in presence of open flames and sparks, of heat.

Fire Fighting Media and Instructions:

SMALL FIRE: carbon dioxide, regular dry chemical.

LARGE FIRE: Flood with fine water spray.

SECTION 4: STABILITY AND REACTIVITY DATA

Reactivity: May polymerize. Avoid storage and use above room temperature.

Conditions to avoid: Avoid heat, flames, sparks and other sources of ignition. Minimize contact with material. Containers may rupture or explode if exposed to heat.

Incompatibilities: acids, metal salts, halogens, halo carbons, oxidizing materials, metals, peroxides

Hazardous decomposition: Thermal decomposition products: oxides of carbon

Polymerization: Polymerizes with evolution of heat. Store in a cool, dry place.

SECTION 5: FIRST AID MEASURES

Inhalation:

If adverse effects occur, remove to uncontaminated area. Give artificial respiration if not breathing. If breathing is difficult, oxygen should be administered by qualified personnel. Get immediate medical attention.

Skin contact:

If frostbite or freezing occur, immediately flush with plenty of lukewarm water (105-115 ^{o}F; 41-46 ^{o}C). Do not use hot water. If warm water is not available, gently wrap affected parts in blankets. Get immediate medical attention.

Eye contact:

Contact with liquid: Immediately flush eyes with plenty of water for at least 15 minutes. Then get immediate medical attention.

Ingestion:

If a large amount is swallowed, get medical attention.

Note to physician:

For inhalation, consider oxygen.

SECTION 6: EXPOSURE CONTROLS/PERSONAL PROTECTION

Ventilation:

Ventilation equipment should be explosion-resistant if explosive concentrations of material are present. Provide local exhaust ventilation system. Ensure compliance with applicable exposure limits.

Eye protection:

For the gas: Eye protection not required, but recommended. For the liquid: Wear splash resistant safety goggles. Contact lenses should not be worn. Provide an emergency eye wash fountain and quick drench shower in the immediate work area.

Clothing:

For the gas: Protective clothing is not required. For the liquid: Wear appropriate protective, cold insulating clothing.

Gloves:

Wear insulated gloves.

Respirator:

Under conditions of frequent use or heavy exposure, respiratory protection may be needed. Respiratory protection is ranked in order from minimum to maximum. Consider warning properties before use.

SECTION 7: HANDLING AND STORAGE

STORAGE: Store and handle in accordance with all current regulations and standards. Protect from physical damage. Store in a cool, dry place. Store in a well-ventilated area. Avoid heat, flames, sparks and other sources of ignition. Grounding and bonding required. Keep separated from incompatible substances.

ETHYLENE OXIDE

SECTION 1: CHEMICAL PRODUCT

Product Name: Ethylene Oxide

CAS No.: 74-21-8

Chemical Name: Ethylene oxide

Chemical Formula: C_2H_4O

Synonym: Oxirane; Dihyrooxirene; Dimethylene Oxide; Epoxyethane; 1,2- Epoxyethane; Ethene Oxide

SECTION 2: PHYSICAL AND CHEMICAL PROPERTIES

Physical state: gas

Colour: colourless

Odour: sweet odour

Molecular weight: 44.06g/mol

Boiling point: 55 ^oF (13 ^oC)

Freezing point: -168 ^oF (-111 ^oC)

Vapour pressure: 1095 mmHg @ 20 ^oC

Vapour density (air=1): 1.5

Specific gravity (water=1): 0.8824 @ 10 ^oC

Water solubility: soluble

pH: Not applicable

Volatility: 100%

Odour threshold: 500 ppm

Evaporation rate: Not applicable

Viscosity: 0.0095 cP @ 20 ^oC

Coefficient of water/oil distribution: Not applicable

Solvent solubility: Soluble: alcohol, ether, acetone, benzene, carbon tetrachloride, organic solvents

SECTION 3: FIRE AND EXPLOSION DATA

Flammability of the Product: Severe fire hazard. The vapour is heavier than air. Vapors or gases may ignite at distant ignition sources and flash back. Vapour/air mixtures are explosive.

Auto-Ignition Temperature: 804 ^{o}F (429 ^{o}C)

Flash Points: CLOSED CUP: -20 ^{o}F (-29 ^{o}C)

Flammable Limits: LOWER: 3% UPPER: 100%

Products of Combustion: These products are carbon oxides (CO, CO_2).

Fire Hazards in Presence of Various Substances:

Highly flammable to flammable in presence of open flames and sparks, of heat.

Fire Fighting Media and Instructions:

SMALL FIRE: Use alcohol-resistant foam, carbon dioxide, regular dry chemical, water.

LARGE FIRE: Use alcohol-resistant foam or flood with fine water spray.

SECTION 4: STABILITY AND REACTIVITY DATA

Reactivity: May decompose explosively when heated above 427 ^{o}C.

Conditions to avoid: Avoid heat, flames, sparks and other sources of ignition. Containers may rupture or explode if exposed to heat.

Incompatibilities: acids, combustible materials, bases, metal salts, metal oxides, amines, halo carbons, metals, cyanides, oxidizing materials

Hazardous decomposition: Thermal decomposition products: oxides of carbon

Polymerization: May polymerize violently or explosively. May polymerize when heated. Avoid contact with incompatible materials.

SECTION 5: FIRST AID MEASURES

Inhalation:

If adverse effects occur, remove to uncontaminated area. Give artificial respiration if not breathing. If breathing is difficult, oxygen should be administered by qualified personnel. Get immediate medical attention.

Skin contact:

If frostbite or freezing occur, immediately flush with plenty of lukewarm water (105-115 ^{o}F; 41-46 ^{o}C). Do not use hot water. If warm water is not available, gently wrap affected parts in blankets. Get immediate medical attention.

Eye contact:

Wash eyes immediately with large amounts of water, occasionally lifting upper and lower lids, until no evidence of chemical remains. Get medical attention immediately.

Ingestion:

Contact local poison control centre or physician immediately. Never make an unconscious person vomit or drink fluids. When vomiting occurs, keep head lower than hips to help prevent aspiration. If person is unconscious, turn head to side. Get medical attention immediately.

SECTION 6: EXPOSURE CONTROLS/PERSONAL PROTECTION

Ventilation:

Provide local exhaust or process enclosure ventilation system. Ensure compliance with applicable exposure limits.

Eye protection:

Wear splash resistant safety goggles with a faceshield. Provide an emergency eye wash fountain and quick drench shower in the immediate work area.

Clothing:

For the gas: Wear appropriate chemical resistant clothing. For the liquid: Wear appropriate protective, cold insulating clothing. Wear appropriate chemical resistant clothing.

Gloves:

For the gas: Wear appropriate chemical resistant gloves. For the liquid: Wear insulated gloves.

Respirator:

Any self-contained breathing apparatus that has a full facepiece and is operated in a pressure-

demand or other positive-pressure mode. Any self-contained breathing apparatus that has a full facepiece and is operated in a pressure-demand or other positive-pressure mode.

SECTION 7: HANDLING AND STORAGE

Storage: Store and handle in accordance with all current regulations and standards. Subject to storage regulations: U.S. OSHA 29 CFR 1910.106. Protect from physical damage. Store below 30 ^{o}C. Store outside or in a detached building. Avoid contact with light. Store in a cool, dry place. Use diking sufficient to contain total contents plus 10%. Store with flammable liquids. Keep separated from incompatible substances. Grounding and bonding required. Keep separated from incompatible substances

ETHYLENE GLYCOL

SECTION 1: CHEMICAL PRODUCT

Product Name: Ethylene glycol

CAS No.: 107-21-1

Chemical Name: 1,2-Ethanediol

Chemical Formula: $HO\text{-}CH_2\text{-}CH_2\text{-}OH$

Synonym: 1,2-Dihydroxyethane; Ethylene dihydrate; Glycol alcohol; Monoethylene glycol; Tescol

SECTION 2: PHYSICAL AND CHEMICAL PROPERTIES

Physical state and appearance: Liquid.

Odour: Odourless.

Taste: Mild sweet

Molecular Weight: 62.07 g/mole

Colour: Clear Colourless.

pH (1% sol/water): Not available.

Boiling Point: 197.6°C (387.7°F)

Melting Point: -13°C (8.6°F)

Specific Gravity: 1.1088 (Water = 1)

Vapour Pressure: 0.06 mmHg @ 20 ^{o}C; 0.092 mmHg at 25 ^{o}C

Vapour Density: 2.14 (Air = 1)

Odour Threshold: Not available.

Water/Oil Dist. Coefficient: The product is more soluble in water; log (oil/water) = -1.4

Dispersion Properties: See solubility in water, acetone.

Solubility:

Soluble in cold water, hot water, acetone. Slightly soluble in diethyl ether. Miscible with lower aliphatic alcohols, glycerol, acetic acid, acetone and similar ketones, aldehydes, pyridine, similar coal tar bases. Practically insoluble in benzene and its homologs, chlorinated hydrocarbons, petroleum ether.

SECTION 3: FIRE AND EXPLOSION DATA

Flammability of the Product: May be combustible at high temperature.

Auto-Ignition Temperature: 398°C (748.4°F)

Flash Points: CLOSED CUP: 111°C (231.8°F).

Flammable Limits: LOWER: 3.2%

Products of Combustion: These products are carbon oxides (CO, CO_2).

Fire Hazards in Presence of Various Substances:

Slightly flammable to flammable in presence of open flames and sparks, of heat. Non flammable in presence of shocks.

Fire Fighting Media and Instructions:

SMALL FIRE: Use DRY chemical powder.

LARGE FIRE: Use water spray, fog or foam. Do not use water jet.

Special Remarks on Explosion Hazards:

Explosive decomposition may occur if combined with strong acids or strong bases and subjected to elevated temperatures.

SECTION 4: STABILITY AND REACTIVITY DATA

Stability: The product is stable.

Instability Temperature: Not available.

Conditions of Instability: Excess heat, incompatible materials.

Incompatibility with various substances: Reactive with oxidizing agents, acids, alkalis.

Corrosivity: Non-corrosive in presence of glass.

Special Remarks on Reactivity:

Hygroscopic. Absorbs moisture from the air. Avoid contamination with materials with hydroxyl compounds. Also incompatible with aliphatic amines, isocyanates, chlorosulfonic acid, and oleum.

Special Remarks on Corrosivity: Not available.

Polymerization: Will not occur.

SECTION 5: FIRST AID MEASURES

Eye Contact:

Check for and remove any contact lenses. In case of contact, immediately flush eyes with plenty of water for at least 15 minutes. Cold water may be used. Get medical attention if irritation occurs.

Skin Contact:

Wash with soap and water. Cover the irritated skin with an emollient. Get medical attention if irritation develops. Cold water may be used.

Inhalation:

If inhaled, remove to fresh air. If not breathing, give artificial respiration. If breathing is difficult, give oxygen. Get medical attention immediately.

Ingestion:

Do NOT induce vomiting unless directed to do so by medical personnel. Never give anything by mouth to an unconscious person. If large quantities of this material are swallowed, call a physician immediately. Loosen tight clothing such as a collar, tie, belt or waistband.

SECTION 6: EXPOSURE CONTROLS/PERSONAL PROTECTION

Engineering Controls:

Provide exhaust ventilation or other engineering controls to keep the airborne concentrations of vapours below their respective threshold limit value. Ensure that eyewash stations and safety showers are proximal to the work-station location.

Personal Protection:

Safety glasses. Synthetic apron. Gloves (impervious). For most conditions, no respiratory protection should be needed.

However, if material is heated or sprayed and if atmospheric levels exceed exposure guidelines, use an approved vapour (air purifying) respirator.

Personal Protection in Case of a Large Spill:

Splash goggles. Full suit. Boots. Gloves. Suggested protective clothing might not be sufficient; consult a specialist BEFORE handling this product.

SECTION 7: HANDLING AND STORAGE

Precautions:

Keep away from heat. Keep away from sources of ignition. Empty containers pose a fire risk, evaporate the residue under a fume hood. Ground all equipment containing material. Do not ingest. Do not breathe gas/fumes/ vapour/spray. Wear suitable protective clothing. If ingested, seek medical advice immediately and show the container or the label. Keep away from incompatibles such as oxidizing agents, acids, alkalis.

Precautions:

Keep container tightly closed. Keep container in a cool, well-ventilated area.

DIETHYLENE GLYCOL

SECTION 1: CHEMICAL PRODUCT

Product Name: Diethylene glycol

CAS No.: 111-46-6

Chemical Name: 2,2'-Oxydiethane

Chemical Formula: $C_4H_{10}O_3$

Synonym: Carbitol

SECTION 2: PHYSICAL AND CHEMICAL PROPERTIES

Physical state and appearance: Liquid. (Clear viscous liquid.)

Odour: Odourless.

Taste: Sweet.

Molecular Weight: 106.12 g/mole

Colour: Colourless.

pH (1% sol/water): 7 [Neutral.]

Boiling Point: 245.8°C (474.4°F)

Melting Point: -8°C (17.6°F)

Specific Gravity: 1.12 (Water = 1)

Vapour Pressure: 0.01 mm of Hg (@ 20°C

Vapour Density: 3.66 (Air = 1)

Odour Threshold: Not available.

Dispersion Properties: See solubility in water, methanol, diethyl ether.

Solubility: Easily soluble in cold water, hot water, methanol, diethyl ether.

SECTION 3: FIRE AND EXPLOSION DATA

Flammability of the Product: May be combustible at high temperature.

Auto-Ignition Temperature: 227.78°C (442°F)

Flash Points: CLOSED CUP: 138°C (280.4°F). OPEN CUP: 143°C (289.4°F)

Flammable Limits: LOWER: 2% UPPER: 12.3%

Products of Combustion: These products are carbon oxides (CO, CO_2).

Fire Hazards in Presence of Various Substances:

Slightly flammable to flammable in presence of open flames and sparks, of heat.

Fire Fighting Media and Instructions:

SMALL FIRE: Use DRY chemical powder.

LARGE FIRE: Use water spray, fog or foam. Do not use water jet.

Special Remarks on Fire Hazards: When heated to decomposition, it emits acrid smoke and irritating fumes.

SECTION 4: STABILITY AND REACTIVITY DATA

Stability: The product is stable.

Incompatibility with various substances: Slightly reactive to reactive with oxidizing agents.

Corrosivity: Not considered to be corrosive for metals and glass.

Special Remarks on Reactivity: Hygroscopic; keep container tightly closed.

Polymerization: No.

SECTION 5: FIRST AID MEASURES

Eye Contact:

Check for and remove any contact lenses. Immediately flush eyes with running water for at least 15 minutes, keeping eyelids open. Cold water may be used. Do not use an eye ointment. Seek medical attention.

Skin Contact:

After contact with skin, wash immediately with plenty of water. Gently and thoroughly wash the contaminated skin with running water and non-abrasive soap. Be particularly careful to clean folds, crevices, creases and groin. Cold water may be used.

Cover the irritated skin with an emollient. If irritation persists, seek medical attention. Wash contaminated clothing before reusing.

Serious Skin Contact:

Wash with a disinfectant soap and cover the contaminated skin with an anti-bacterial cream. Seek medical attention.

Inhalation:

Allow the victim to rest in a well ventilated area. Seek immediate medical attention.

Ingestion:

Do not induce vomiting. Loosen tight clothing such as a collar, tie, belt or waistband. If the victim is not breathing, perform mouth-to-mouth resuscitation. Seek immediate medical attention.

SECTION 6: EXPOSURE CONTROLS/PERSONAL PROTECTION

Engineering Controls:

Provide exhaust ventilation or other engineering controls to keep the airborne concentrations of vapours below their respective threshold limit value. Ensure that eyewash stations and safety showers are proximal to the work-station location.

Personal Protection:

Splash goggles. Lab coat. Vapour respirator. Be sure to use an approved/certified respirator or equivalent. Gloves.

Personal Protection in Case of a Large Spill:

Splash goggles. Full suit. Vapour respirator. Boots. Gloves. A self contained breathing apparatus should be used to avoid inhalation of the product. Suggested protective clothing might not be sufficient; consult a specialist BEFORE handling this product.

SECTION 7: HANDLING AND STORAGE

Precautions:

Keep away from heat. Keep away from sources of ignition. Empty containers pose a fire risk, evaporate the residue under a fume hood. Ground all equipment containing material. Do not ingest. Do not breathe gas/fumes/ vapour/spray. Wear suitable protective clothing In case of insufficient ventilation, wear suitable respiratory equipment If ingested, seek medical advice immediately and show the container or the label. Avoid contact with skin and eyes

Storage:

Keep container dry. Keep in a cool place. Ground all equipment containing material. Keep container tightly closed. Keep in a cool, well-ventilated place. Combustible materials should be stored away from extreme heat and away from strong oxidizing agents.

TRIETHYLENE GLYCOL

SECTION 1: CHEMICAL PRODUCT

Product Name: Triethylene glycol

CAS No.: 112-27-6

Chemical Name: Triethylene glycol

Chemical Formula: $C_6H_{14}O_4$

Synonym: 2,2'-[1,2-Ethanediylbis(oxy)]bisethanol

SECTION 2: PHYSICAL AND CHEMICAL PROPERTIES

Physical state and appearance: Liquid. (Hygroscopic liquid.)

Odour: Not available.

Taste: Not available.

Molecular Weight: 150.18 g/mole

Colour: Colourless.

pH (1% sol/water): Not available.

Boiling Point: 285°C (545°F)

Melting Point: -5°C (23°F)

Specific Gravity: 1.1274 (Water = 1)

Vapour Pressure: 0.0001 mmHg at 20^oC

Vapour Density: 5.17 (Air = 1)

Odour Threshold: Not available.

Solubility: Easily soluble in cold water.

SECTION 3: FIRE AND EXPLOSION DATA

Flammability of the Product: May be combustible at high temperature.

Auto-Ignition Temperature: 371°C (699.8°F)

Flash Points: CLOSED CUP: 177°C (350.6°F). OPEN CUP: 165.5°C (329.9°F).

Flammable Limits: LOWER: 0.9% UPPER: 9.2%

Products of Combustion: These products are carbon oxides (CO, CO_2).

Fire Fighting Media and Instructions:

SMALL FIRE: Use DRY chemical powder.

LARGE FIRE: Use water spray, fog or foam. Do not use water jet.

SECTION 4: STABILITY AND REACTIVITY DATA

Stability: The product is stable.

Corrosivity: Non-corrosive in presence of glass.

Polymerization: No

SECTION 5: FIRST AID MEASURES

Eye Contact:

Check for and remove any contact lenses. Immediately flush eyes with running water for at least 15 minutes, keeping eyelids open. Cold water may be used. Do not use an eye ointment. Seek medical attention.

Skin Contact:

No known effect on skin contact, rinse with water for a few minutes.

Inhalation:

Allow the victim to rest in a well ventilated area. Seek immediate medical attention.

Ingestion:

Do not induce vomiting. Loosen tight clothing such as a collar, tie, belt or waistband. If the victim is not breathing, perform mouth-to-mouth resuscitation. Seek immediate medical attention.

SECTION 6: EXPOSURE CONTROLS/PERSONAL PROTECTION

Engineering Controls:

Provide exhaust ventilation or other engineering controls to keep the airborne concentrations of vapours below their respective threshold limit value. Ensure that eyewash stations and safety showers are proximal to the work-station location.

Personal Protection:

Splash goggles. Lab coat.

Personal Protection in Case of a Large Spill:

Splash goggles. Full suit. Boots. Gloves. Suggested protective clothing might not be sufficient; consult a specialist BEFORE handling this product.

SECTION 7: HANDLING AND STORAGE

Precautions:

Keep away from heat. Keep away from sources of ignition. Empty containers pose a fire risk, evaporate the residue under a fume hood. Ground all equipment containing material. Do not ingest. Do not breathe gas/fumes/ vapour/spray. Avoid contact with eyes If ingested, seek medical advice immediately and show the container or the label.

Storage:

Keep container dry. Keep in a cool place. Ground all equipment containing material. Keep container tightly closed. Keep in a cool, well-ventilated place. Combustible materials should be stored away from extreme heat and away from strong oxidizing agents.

APPENDIX B – PYTHON CODE

Calculation of Real Gas Volume

```
import scipy, scipy.optimize
def funcPsat(P, T, molecule):
lnphiL, lnphiG = molecule.getPhiLG(T, P)
return lnphiL - lnphiG

class EOS:
def __init__(self, eos, molecule):
self.typeEOS = eos
self.typeMolecule = molecule
self.R = 8.3140 #J/mol/K
self.getaandb()
def getaandb(self):
R = self.R
typeEOS = self.typeEOS
typeMolecule = self.typeMolecule
Pc = typeMolecule.Pc
Tc = typeMolecule.Tc
OmegaA = typeEOS.OmegaA
OmegaB = typeEOS.OmegaB
self.a = OmegaA*(R*Tc)**2/Pc
self.b = OmegaB*(R*Tc)/Pc
def alpha(self,T):
Tc = self.typeMolecule.Tc
acc = self.typeMolecule.acc
return self.typeEOS.alpha(T/Tc, acc)
def P(self,T, v):
typeEOS = self.typeEOS; R = self.R
a, b = self.a, self.b
pp = R*T/(v-b) - a*self.alpha(T)/(v+typeEOS.epsilon*b)/(v+typeEOS.sigma*b)
```

```
return pp
def Z(self, T, P):
R = self.R; a = self.a; b = self.b
sigma = self.typeEOS.sigma; epsilon = self.typeEOS.epsilon
alpha = self.alpha(T)
p_p = P*b/R/T; a_p = P*a*alpha/R**2/T**2
a3 = 1.0
a2 = epsilon*p_p + p_p*sigma - p_p - 1.0
a1 = a_p + epsilon*p_p**2*sigma - epsilon*p_p**2 - epsilon*p_p - p_p**2*sigma -
p_p*sigma
a0 = -a_p*p_p - epsilon*p_p**3*sigma - epsilon*p_p**2*sigma
roots = scipy.roots([a3, a2, a1, a0])
roots = [rt.real for rt in roots if abs(rt.imag) < 1e-16]

if len(roots) == 3:
z = max(roots)
# return scipy.array([min(roots), max(roots)])
elif len(roots) == 1:
z = max(roots)
# return scipy.array(roots)
else:
z= max(roots)
return
return z
def X(self, T, P):
R=self.R
Z=self.Z(T,P)
x = Z*R*T/P
return x
```

Calculation of Gibbs Free Energy of Real Gas

```
import scipy
import hp
import eo,pr
T=473.16
P=101325*30
Tc=eo.Tc
a=hp.EOS(pr,eo).a
b=hp.EOS(pr,eo).b
sigma = 1.0 + 2.0**0.5
epsilon = 1.0 - 2.0**0.5
alpha=hp.EOS(pr,eo).alpha(T)
R=8.3142
m=0.37464+1.5422*(eo.acc)-0.2699*((eo.acc)**2)
vg=hp.EOS(pr,eo).X(T,P)
g=lambda x: ((R/(x-b))-(a/((x+epsilon*b)*(x+sigma*b))))*
(-1*(alpha**0.5)*m/((T*Tc)**0.5))*T-(R/(x-b))+a*alpha/((x+epsilon*b)*(x+sigma*b))
from scipy import integrate as intg
answer=intg.quad(g,10000,vg)
a1=answer
print answer
G = P*vg-R*T+a1
print G
# unit= j/molK
```

Calculation of Entropy of Real Gas

```
import scipy
import hp
import oxy,pr
T=298
P=101325
```

```
Tc=oxy.Tc
a=hp.EOS(pr,oxy).a
b=hp.EOS(pr,oxy).b
sigma = 1.0 + 2.0**0.5
epsilon = 1.0 - 2.0**0.5
alpha=hp.EOS(pr,oxy).alpha(T)
R=8.3142
m=0.37464+1.5422*(oxy.acc)-0.2699*((oxy.acc)**2)
vg=hp.EOS(pr,oxy).X(T,P)
g=lambda x: ((R/(x-b))-(a/((x+epsilon*b)*(x+sigma*b))))*
(-1*(alpha**0.5)*m/((T*Tc)**0.5))-(R/x)
from scipy import integrate as intg
answer=intg.quad(g,10000,vg)
a1=answer
print answer
S = R*scipy.log(P*vg/R/T)+a1
print S
# unit= j/molK
```

APPENDIX C – PROCESS DESIGN DATA SHEET FOR R102

		PROCESS DATA SHEET FOR REACTOR			DOC. NO.:	
					CAD. NO.:	
					SHT.:	
					PROJECT: HOME PAPER 2015	
CLIENT: SWAPNIL DESHMUKH					CONTRACT NO.:	
EQPT NO.: R102		SERVICE: ETHYLENE OXIDE TO ETHYLENE GLYCOL CONVERSION			QUANTITY: 1	
MOUNTING: HORIZONTAL		DIMENSIONS; L=16M D= 0.85M			CAPACITY	LITERS
MATERIALS	SP. GR. (AVG.)	UNITS	QTY	REMARK	WORKING	2150
ETHYLENE OXIDE	0.002	g/cc	167265TPA			
WATER	1	g/cc	346541TPPA		ACTUAL	2150
MONOETHYLENE GLYCOL	1.115	g/cc	200000TPA			
DIETHYLENE GLYCOL	1.118	g/cc	26313TPA		NOMINAL	
TRIETHYLENE GLYCOL	1.125	g/cc	3785TPA			

LOCATION: ON GROUND		MINIMUM ELEVATION (FORNPSH): NA	
	UNITS	TUBE SIDE	SHELL SIDE
NORMAL PRESSUR	kg/cm^2	30.6	1
DESIGN PRESSURE	kg/cm^2	33.6	5
NORMAL TEMPERATURE	^oC	250	245
DESIGN TEMPERATURE	^oC	300	300
MOC		SS304	SS304
CORROSION ALLOWANCE	mm	2	2
LINING MATERIAL: NA		THK.: NA	
TYPE OF SUPPORT:			
HEAT DUTY (EXT/INT): 12.11MW			
EXTERNAL HEATING/COOLING FLUID: DOWTHERM		AREA: $386m^2$	
INTERNAL HEATING/COOLING FLUID: NA		AREA: NA	
HEAT TRANSFER COEFFICIENT (OVERALL): $607W/m^2K$			
TUBE DETAILS: INT DIA=254mm, EXT DIA=325mm, NO. OF TUBES=132			
BAFFLE DETAILS: BAFFLE SPACING=0.33m, NO. OF BAFFLES=47			
INSULATION: GLASS WOOL			

RADIOGRAPHY: *	STRESS RELIEVED: *
JOINT EFFICIENCY: *	
NOTES: 1. MECHANICAL TO SPECIFY MARKED THUS '*' 2. NA: NOT APPLICABLE	

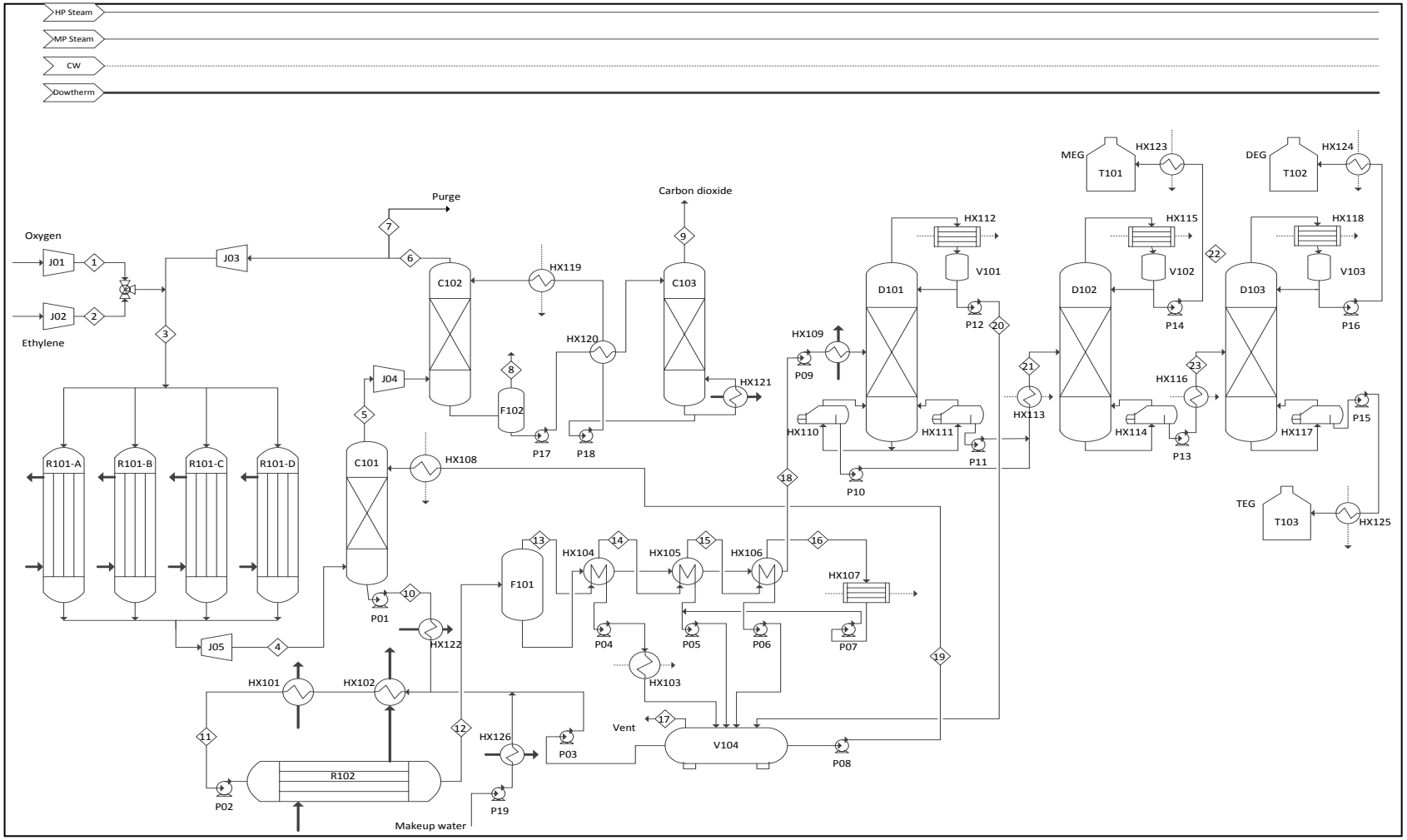

Equipment	Description
R101-A,B,C,D	EO reactors
R102	EG reactor
D101	Atmospheric distillation column
D102, D103	Vacuum distillation columns
HX110, HX111, HX114, HX117, HX121	Reboilers
HX112, HX115, HX118	Condensers
V101, V102, V103	Reflux drums
V104	Process liquid drum
C101	EO absorption column
C102	CO_2 absorption column
C103	CO_2 stripping column
F101, F102	Flash drum
J05	Turbine
J01, J02, J03, J04	compressors
T101, T102, T103	Storage tanks
HX104, HX105, HX106	Multi-effect evaporator
HX101,HX102,HX103,HX107,HX108,HX109, HX113,HX116,HX119,HX120,HX122,HX123, HX124,HX125,HX126	Heat Exchangers

(All numbers in kg/hr)

Stream No.	1.00	2.00	3.00	4.00	5.00	6.00	7.00	8.00	9.00	10.00	11.00	12.00	13.00	14.00	15.00	16.00	17.00
Ethylene	16479.19	-	54786.20	38350.34	38345.35	38345.35	38.35	-	-	4.99	4.99	4.99	4.99	-	-	-	4.99
Oxygen	-	16545.95	125225.60	108789.74	108788.44	108788.44	108.79	-	-	1.30	1.30	1.30	1.30	-	-	-	1.30
EO	-	-	54.97	22008.58	1100.43	55.02	0.06	1045.41	-	20908.15	20908.15	20.91	20.91	-	-	-	20.91
H2O	-	-	-	3169.77	-	-	-	-	-	45355.15	167265.20	159389.76	29158.7	27501.39	27409.28	27738.04	-
CO2	-	-	23.10	7771.44	7708.89	23.13	0.02	-	7685.77	62.54	62.54	62.54	62.54	-	-	-	62.54
MEG	-	-	-	-	-	-	-	-	-	317.71	600.21	25617.43	140.83	137.83	143.76	152.74	-
DEG	-	-	-	-	-	-	-	-	-	5.67	10.27	3281.02	2.83	2.63	2.48	2.32	-
TEG	-	-	-	-	-	-	-	-	-	0.51	0.93	475.64	0.76	0.06	0.06	0.05	-

Stream No.	18.00	19.00	20.00	21.00	22.00	23.00	24.00	25.00
H2O	47582.27	42185.37	47577.51	4.76	4.76	-	-	-
MEG	25042.26	317.71	25.04	25017.22	24992.20	25.02	25.02	-
DEG	3270.75	5.67	-	3270.75	3.27	3267.48	3264.21	3.27
TEG	474.71	0.51	-	474.71	-	474.71	4.75	469.96

PROCESS FLOW DIAGRAM

'A Plant to Manufacture 200000TPA of Ethylene Glycol'

SWAPNIL DESHMUKH

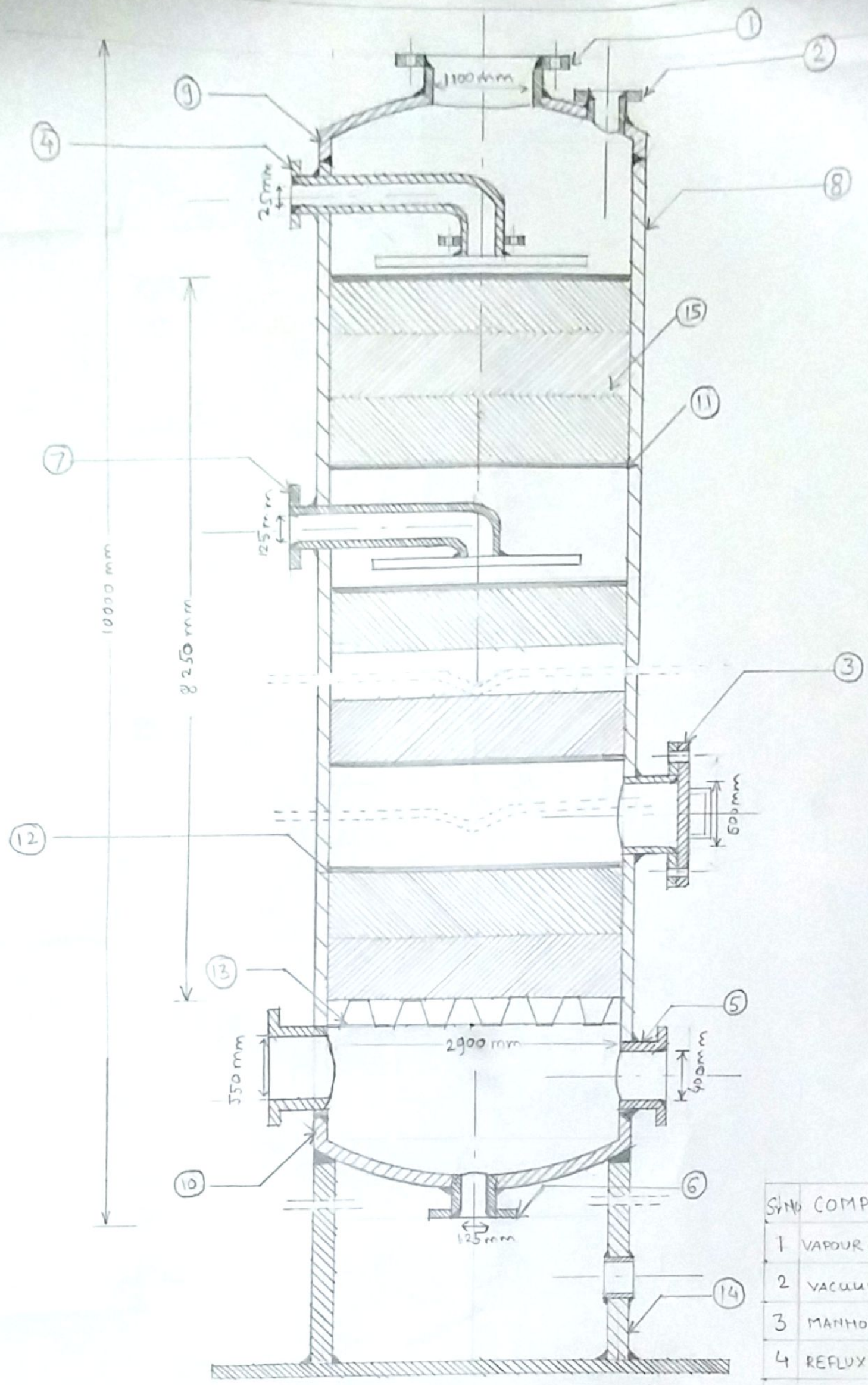

SECTIONAL FRONT VIEW (FULL)

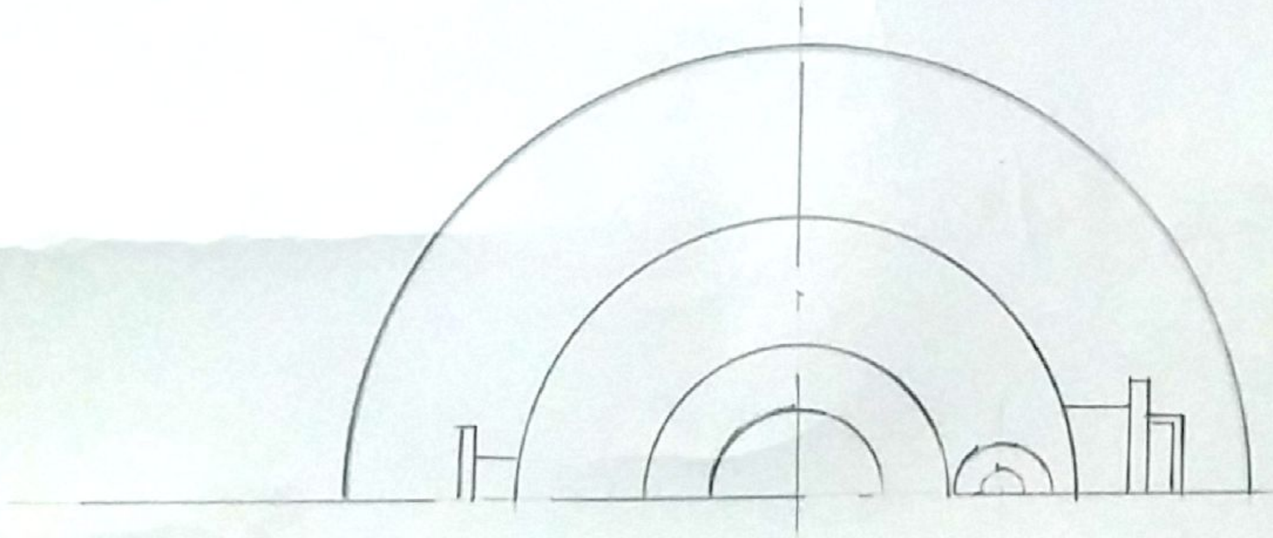

TOP VIEW (HALF)

S/NO	COMPONENT	QUANT	MATERIAL
1	VAPOUR OUTLET NOZZLE	1	SS304
2	VACUUM NOZZLE	1	SS304
3	MANHOLE NOZZLE	1	SS304
4	REFLUX INLET NOZZLE	1	SS304
5	VAPOUR INLET NOZZLE	2	SS304
6	LIQUID OUTLET NOZZLE	1	SS304
7	FEED NOZZLE	1	SS304
8	SHELL	1	SS304
9	TOP HEAD	1	SS304
10	BOTTOM HEAD	1	SS304
11	PACKING SUPPORT PLATE	3	SS304
12	PACKING HOLD DOWN PLATE	3	SS304
13	PACKING SUPPORT PLATE	1	SS304
14	SKIRT	1	SS304
15	STRUCTURED PACKING	-	SS304

PACKED DISTILLATION COLUMN - D101

SWAPNIL DATTATRAY DESHMUKH
11CHE1017
FINAL YEAR CHEM ENG
23-01-2015